Total Plasma Viewing - The Complete Story

Lisa Goldstone, Roger Soumah, Jobin Yvon S.A.S., Horiba Group, Lonjumeau, France

Keywords: plasma viewing, axial, radial, horizontal, vertical

1 Introduction

The view of the plasma must be selected with any purchase of an ICP spectrometer. Today, many vendors offer axial or radial view and some even offer axial with radial or DUAL view systems. This can can become difficult to understand and must be optimized for your sample analysis so that you do not make the wrong choice.

JY is the only company today using a single view vertical torch. With such an obvious difference, we want to present the total view of plasma view and our design in order to demonstrate the JY advantage.

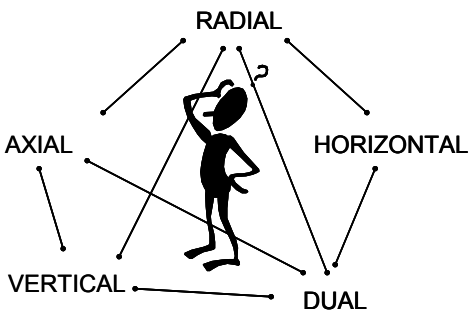

Figure 1: What to choose?

2 Regions of the plasma

There are three regions or zones in the plasma, depending on the temperature. Refer to Figure 2 to see the location of each region.

1. Initial Radiation Zone (IRZ)
- mainly atomic species
- many interferences due to low temperature and lack of reaction time to complete the atomization process
- avoid viewing this area

2. Normal Analytical Zone (NAZ)
- predominantly ionic species
- few interferences
- optimum viewing area of plasma

3. Plasma Tail
- mainly oxides and recombination
- molecules due to cooler temp
- avoid viewing this area

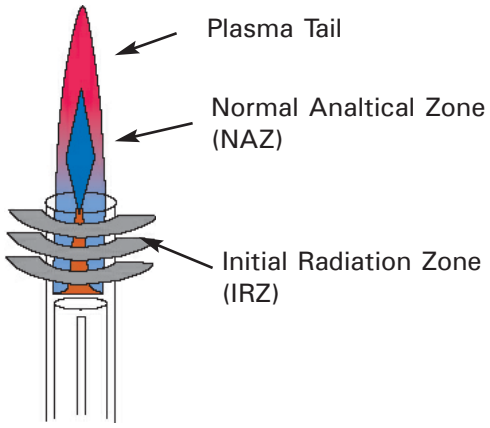

Figure 2: Regions of the plasma

Two regions must be avoided: the Initial Radiation Zone and the Plasma Tail.

3 ICP viewing configurations

3.1 Benefits of radial viewing

The benefits of radial viewing are minimal interferences due to the low background and lack of viewing the IRZ and plasma tail.

3.2 Benefits of axial viewing

The main benefit of axial viewing is lower detection limits due to increased signal from the increased path length. You must remove the tail of the plasma in the instrument design. The cross section in Figure 3 shows the signal of the sample surrounded by stray light and background. This is important to keep in mind when we discuss limitations of the axial plasma.

3.3 Limitations of axial viewing

The first limitation comes from the fact that the initial radiation zone cannot be suppressed. And as stated initially, this zone produces intereferences.

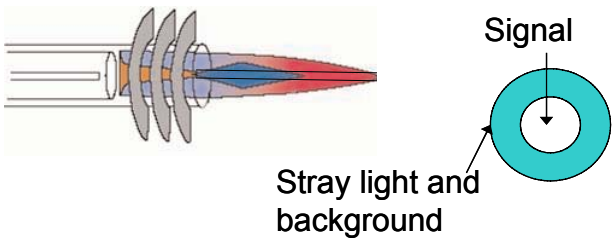

Figure 3: Axial viewing

Two other limitations arise as effects of viewing the entire length of the plasma. These must be overcome in order to effectively use the axial view. Let us consider the Easily Ionizable Element or EIE effect.

3.3.1 Easily Ionizable Element effects (EIE)

The Easily Ionizable Element effect is exhibited as an enhancement of the signal of an atomic wavelength (the alkali elements) by the presence of even moderate concentrations of other elements and even increasing concentrations of the analyte element.

The EIE effect is complex and unpredictable. The solution to avoid this problem is to view these elements radially.

Table 1: Example of EIE effect on K

Analyzed solution	Axial view (ppm)	Radial view (ppm)
50 ppm K	50.2	50.3
50 ppm K 100 ppm Mg	65.7	50.2
50 ppm K 100 ppm Mg/Ca	73.4	50.6
50 ppm K 1 000 ppm Mg	78.5	50.9

3.4 Dual view

Due to the requirement for the radial view in such cases, a dual view has been created. This view offers the axial mode to provide improved detection limits and the radial plasma view for samples where matrices are complex such as high dissolved solids, high salts and organics.

The real question is then why can a radial ICP from JY provide better detection limits than even an axial view from other manufacturers.

The answer is clear - JY takes the total view of the analysis, considering not only the plasma view but the optical and detection design in the final result.

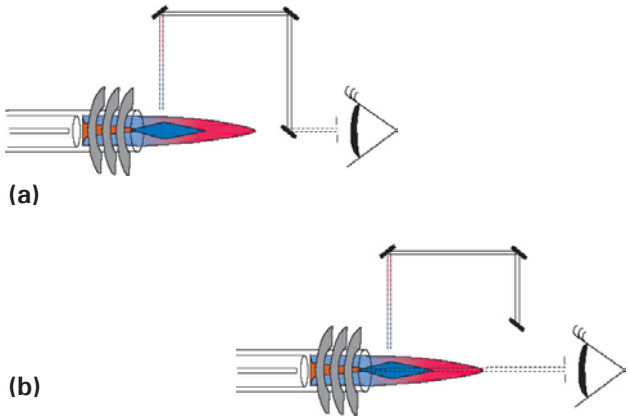

Figure 4: Dual view plasma configuration used in radial (a) and axial view (b)

4. JY total view system

In this section we will see why the JY total view offers higher performance than axial or dual view.

Its simple really, for the same reproducibility, detection limits are about increasing the signal and decreasing the background to provide a good signal-to-background ratio. JY provides more signal in the total system by using the largest entrance slit of 6 mm, compared to other values that are typically 0.3 mm.

JY uses the highest luminosity optics at 80 by 110 millimeters compared to smaller sized echelle gratings.

Finally, JY offers the most efficient optical design with only 3 surfaces compared to typically 9 to 13. The bottom line is we make better use of the light once it arrives inside the spectrometer so that ultimately more arrives at the detector.

When considering the background signal, the total JY ICP system provides minimal interferences from the plasma due to the use of a radial view and the high resolution optics provide the cleanest background. Being specialists in spectroscopy with 185 years of optical experience means that our optics have the fewest optical aberrations and the lowest stray light available today...resulting in the lowest background.

Finally, the JY system uses a 6 mm entrance slit to match the 6 mm height of the plasma analytical zone. In the optical system, this view is imaged through the spectrometer onto the entire surface of the detector, again using the light more efficiently compared to other designs.

5. Orientation of the torch and viewing of the plasma

There are two possibilities for the orientation of the torch.

1. Vertical Mount
   - Simple design of an ICP torch
   - Easy to handle high dissolved salts
   - Few matrix interferences
   - Viewing height can be a key parameter

2. Horizontal Mount
   - Needs a dedicated and complicated interface to view the plasma
   - Running cost (max 25 L/min)
   - Auxiliary gas
   - Monoblock torches
   - Centering is ultra important: need of special mechanics
   - High dissolved sample limitation
   - Organics difficult to analyze

If we look at the orientation of the torch, we see two possible mounts: one vertical and one horizontal. The vertical mount is typically reserved for single view radial plasma systems and offers a simple design. It offers the benefits we have seen earlier for radial view.

The horizontal mount on the other hand, requires a special interface to protect the entrance optics from the plasma. This combined with the high gas flows required can increase the operating cost of the ICP. As shown earlier, when looking down the path-length of the plasma, there are inherent problems with samples that have high dissolved solids and organics.

Radial View: vertical torch mounting
- Looks only at the NAZ
- AVOIDS viewing the bullet and plasma tail by viewing height control

Axial View: horizontal torch mounting
- Views both the NAZ and the bullet
- Removes the plasma tail with a cone or shear gas

Dual View: horizontal torch mounting
- Achieved by means of a movable mirror plus two fixed mirrors
- Optimized for axial view
- Viewing region, both axial and radial is small
- You need to have an optical alignment

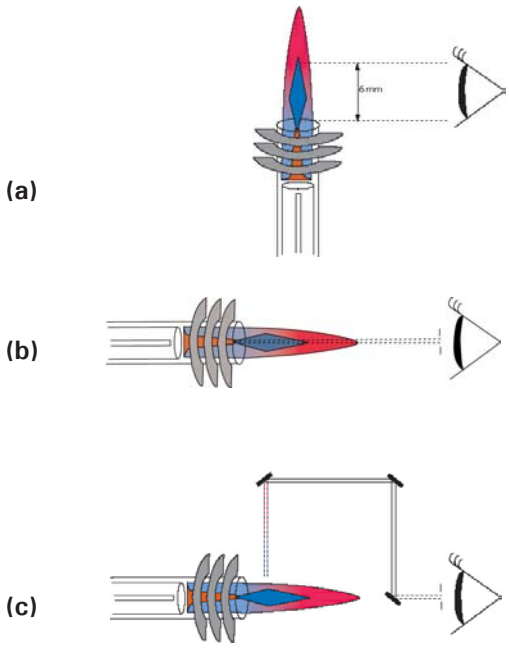

Figure 5: Plasma viewing and torch positioning
(a) radial viewing (b) axial viewing (c) dual viewing

6. Conclusion

To summarize we see that the perfect solution is to have the detection limits offered from an axial view with the flexible analysis associated with the radial view. To this end, some vendors present dual view as the best of both worlds. As we have just seen, however, the dual torch is optimized for axial viewing and suffers from many interferences and limitations. Also keep in mind that axial viewing gives better sensitivity only in comparison to the same instrument with the same size entrance slit. Typical axial or dual view systems use slits of 0.3 mm compared to the JY slit of 6 mm.

You need to make a choice of view for every sample, axial or radial. JY offers the total view with radial plasma combined with a light-rich, high performance optical system used with a superior solid state detector designed for spectroscopy.

ISO 9001:2000
Certificate No A 25

In the USA:
Jobin Yvon Inc.
3880 Park Avenue
Edison, NJ 08820
Tel: 1-732-494-8660
Fax: 1-732-494-8796
E-mail:
emission@jobinyvon.com

1-866-Jobin.Yvon

www.jobinyvon.com

In France:
Jobin Yvon S.A.S.
16-18, rue du Canal
91165 Longjumeau Cedex
Tel: (33) 1/64 54 13 00
Fax: (33) 1/69 09 90 88

Germany: (49) 89/46 23 17-0
Italy: (39) 2/57 60 56 90
U.K.: (44) 20/82 04 81 42

In Japan:
Horiba Ltd.
2 Miyanohigashi, Kisshoin
Minami-ku, Kyoto 601-8510
TEL: (81) 75 313 8121
FAX: (81) 75 321 5725
www.horiba.com

China: (86) 10/68 49 2216
Spain: (34) 91/724 16 57
Other Countries: Contact JY S.A.S.