HORIBA
Semiconductor

STEC Fluid Control Technology

CRITERION

DIGITAL MASS FLOW MODULE

D500


HORIBASTEC
Flow
CRITERION
DIGITAL MASS FLOW MODULE
EtherCAT

New Concept Mass Flow Module

CRITERION

DIGITAL MASS FLOW MODULE

D500

HORIBA STEC has developed a new series of flow control modules called the D500 that satisfies the extremely stringent performance requirements for gas flow control in next generation semiconductor fabrication processes. The D500 achieves high sensitivity flow measurements over a wide dynamic range of flows by measuring the differential pressure across an advanced laminar flow element. The D500 utilizes a reliable piezoelectric metal diaphragm control valve. This valve has been proven itself over the last 20 years and is the standard actuator for HORIBA STEC's line of mass flow controllers. This valve design benefits from an extremely small dead volume and produces high speed flow control. In addition, the placement of the control valve on the inlet of the MFC gives the D500 excellent pressure insensitivity. With the D500 the gas flow to the process remains undisturbed even if the supply pressure fluctuates. The brain of the D500 is its 32bit CPU which calculates mass flow utilizing a 3 dimensional map developed by actual process gas testing. The CPU calculates the mass flow through the D500 based on the current values of temperature, line pressure and the differential pressure across the advanced laminar flow element and actuates the Piezo valve every 2 milliseconds to maintain the desired flow. The result is high accuracy, high resolution, and high speed response in gas control.

CRITERION

DIGITAL MASS FLOW MODULE

D500

Origin of the Product Name

Criterion [kraɪtí(ə)riən]

The name "CRITERION" is based on the Greek word "Kriterion," meaning a reference, standard, or yardstick on which to base a judgment. Aiming to become the world's leading company in the fluid control field, HORIBA STEC created a new series of flow control modules and called it CRITERION.

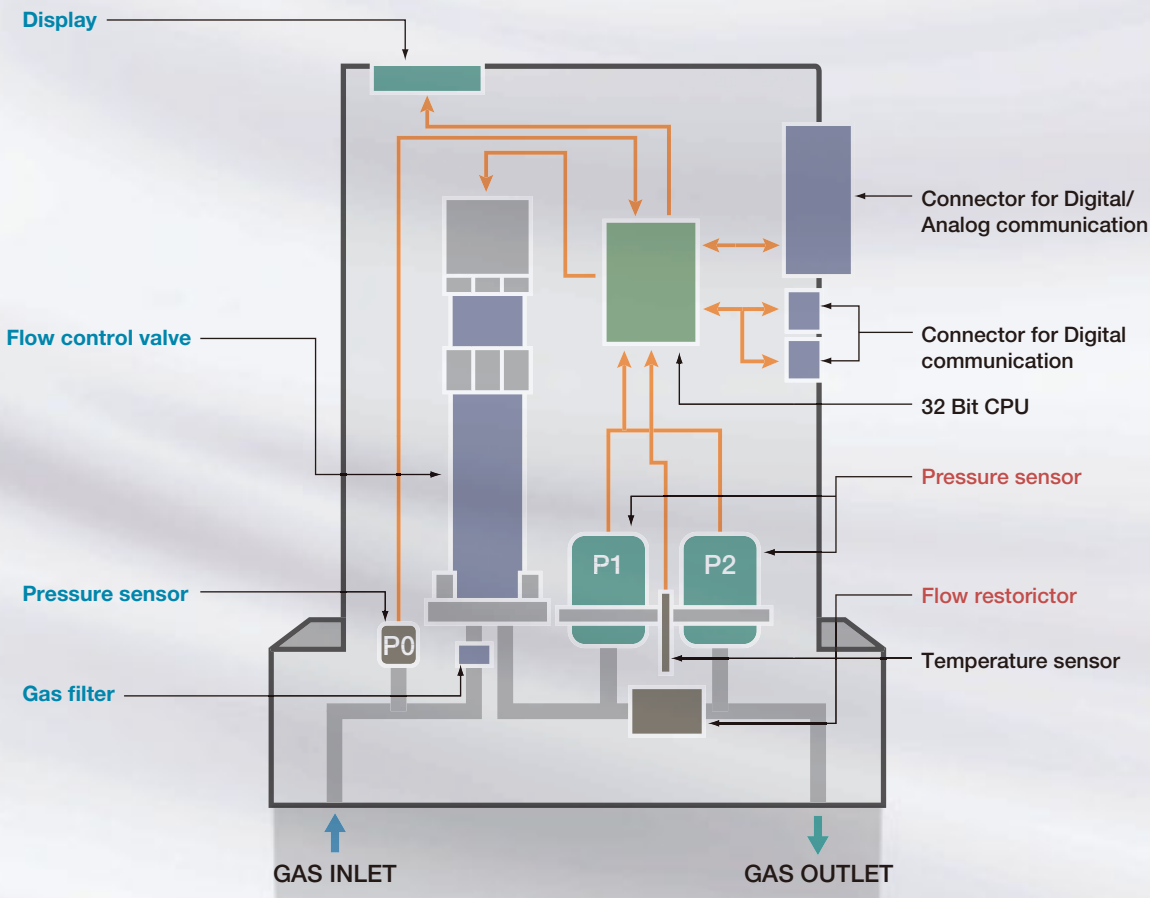

[Structure]

The device consists of a pressure sensor for monitoring an operating supply pressure, a particle protection filter, a flow rate control valve, a flow restrictor, a pair of absolute pressure sensors, and a temperature sensor. Operating pressures and outlet pressures of the flow restrictor as well as temperature are used to obtain an accurate flow rate through conversion by the computation circuit. The measured flow rate is used to drive the control valve to the flow rate set value.

New functions and high performance in one unit

[High Accuracy]

[Fast Response]

[Dynamic Range]

[Pressure Performance]

[G-LIFE
Self-Diagnosis Function]

[Multi gas, multi range,
multi pressure]

[Complying with all RoHS regulations]

RoHS regulations:
RoHS stands for "Restriction of Hazardous Substances" and is a set of regulations enforced in the EU to limit the use of six hazardous substances (lead, mercury, cadmium, hexavalent chromium, polybrominated biphenyls (PBBs) and polybrominated diphenyls (PBDEs)), in electric and electronic components.

[High Accuracy]

Improvement in flow rate accuracy

CRITERION D500 (hereinafter referred to as D500) obtains characteristic data of a gas based on the HORIBA ROR System* by utilizing actual process gas to improve the actual flow rate accuracy of the D500. According to the measurement principle of the HORIBA ROR System, an equation of state of ideal gas in which a controlled gas is introduced into a vacuum exhausted chamber is applied to obtain a flow rate by conversion from a pressure increase rate inside the chamber. Flow rate characteristic data of the process gas is subjected to three-dimensional mapping in terms of pressure and flow rate. The gas data map from the actual process gas is loaded into the D500, thereby guaranteeing control of an actual flow rate with high accuracy.

Unlike sonic nozzle approaches, utilizing a laminar-flow-viscous-range-pressure-difference as in the D500, eliminates the necessity for satisfying a critical pressure condition. The D500 can be utilized in a wide range of a pressure condition equivalent to or below 53.3kPa(A).

3D map

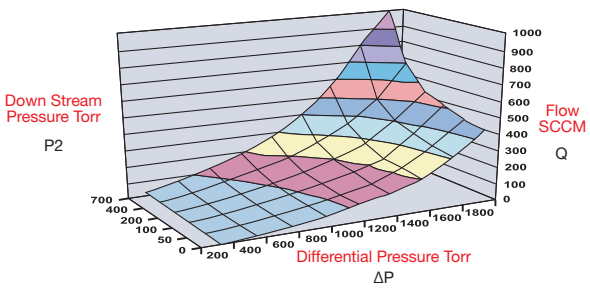

Set point accuracy

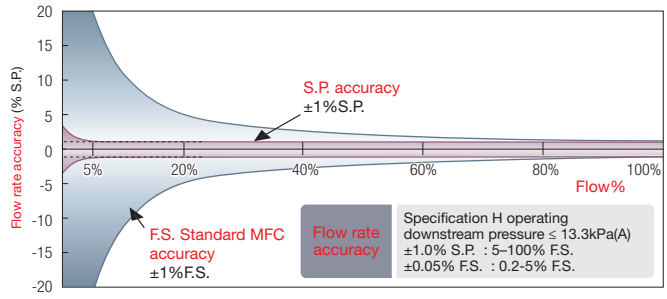

*ROR System : Rate of Rise System

[Principle of Measurement]

For the perfect laminar flow element the mass flow rate is proportional to the square of the absolute upstream pressure – the absolute downstream pressure.

$$Q = k(P1^2 - P2^2)$$

The D500 module utilizes a specialized compressible laminar flow restrictor and measures flow rate based on the above equation. By its nature, the flow relationship between pressure and mass flow is beneficially non-linear. At lower flows the pressure increase required for an incremental flow increase is much larger than the required pressure increase for the same incremental flow increase from a higher flow. In addition, the D500 is not limited like a sonic-based MFC to maintain a critical pressure ratio, P1/P2, allowing the D500 to operate to higher outlet pressures.

As a result the D500 has a natural percent of reading characteristic as opposed to the percent full scale error characteristic displayed by conventional MFCs. This inherent property enables the high-accuracy the D500 modules to operate over a wider dynamic range than the competition.

To establish and verify flow measurement accuracy on process gases which are often non-ideal, empirical data, which is taken on each process gases at multiple temperatures and pressure conditions, has been compiled into our three-dimensional mapping database allowing a high degree of accuracy even when temperature or outlet conditions fluctuate.

Nonlinear Characteristics Diagram

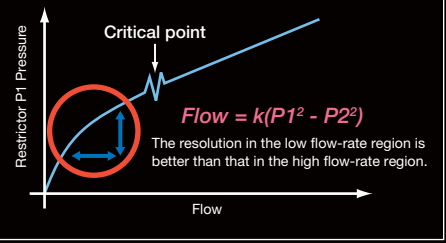

[Fast Response]

Fast response across an entire flow rate range

In cutting-edge deposition and etching, fast response is an important factor. The D500 combines an algorithm which is unique to HORIBA STEC, Co., Ltd. and supports fast response of digital MFC, a high-speed pressure sensor, a fast and stable piezoelectric actuator, and a fast response 32 bit CPU capable of handling changes in process gas delivery conditions. This combination of high quality and high speed components enables the D500 to provide accurate and responsive flow control in transient and steady-state conditions across the entire flow range from the smallest to the largest set points.

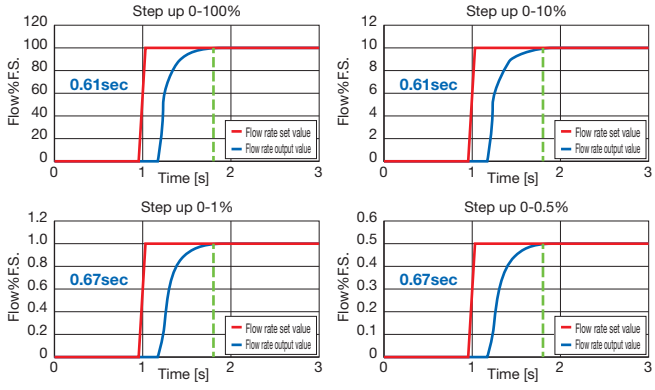

[Dynamic Range]

An opportunity to reduce the size of the gas panel

The historic flow control range of the MFC has been 2% to 100%. The increased diversification in cutting-edge processes has resulted in a demand for a widening of the range of gas flows into the chamber, beyond this 50 to 1 dynamic range. To provide this wider control with older technology MFCs, it has been necessary to install two MFCs with different full scales for the same gas, increasing the size and cost of the gas box.

The D500's low-flow-rate accuracy, combined with its advanced control algorithms, widens its dynamic control range 500 to 1, accurately controlling flows from 0.2 to 100% full scale.

Wide range

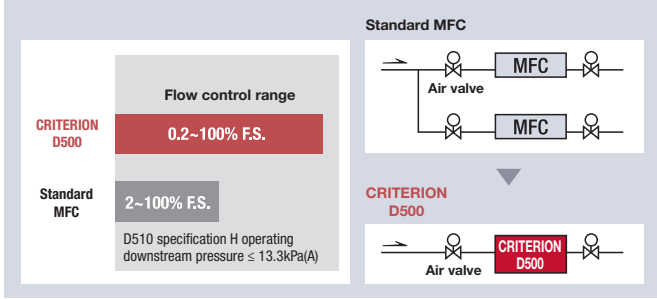

[PI Performance]
(Pressure Insensitive)

New module to simplify gas lines

Some semiconductor tools, cluster tools, have multiple chambers each with their own gas panel. Typically a single gas supply feeds these multiple panels. As a result, the same gas line feeds multiple MFCs concurrently leading to the potential for MFC cross talk. Cross talk is the interaction of multiple MFCs being supplied pressure by a single regulator. The gas delivery pressure from a gas regulator is affected by the flow demand from the MFCs. When one MFC turns on or turns off the flow demand to the single supply regulator changes causing the delivery pressure to all MFCs to spike or droop. The flow measuring section in a conventional MFC is affected by these supply pressure fluctuations, indicating false flows that do not represent the actual flow out of the MFC and can cause system faults in addition to flow errors.
The D500, with its measuring section placed downstream of its control valve is not affected by supply pressure fluctuations. The D500 realizes stable flow control by using a newly developed control algorithm that can buffer pressure fluctuations. The D500 incorporates its own supply pressure sensor which can be read locally on its cover and remotely via digital communications. As a result, the costly stand-alone inlet pressure transducers common on conventional gas sticks can be eliminated.

Piping diagram for pressure fluctuation test

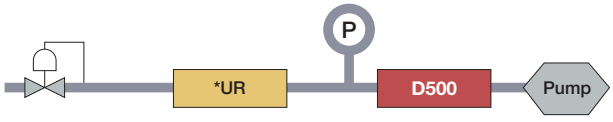

*Automatic pressure regulator for pressure fluctuation

Output diagram for pressure fluctuation test

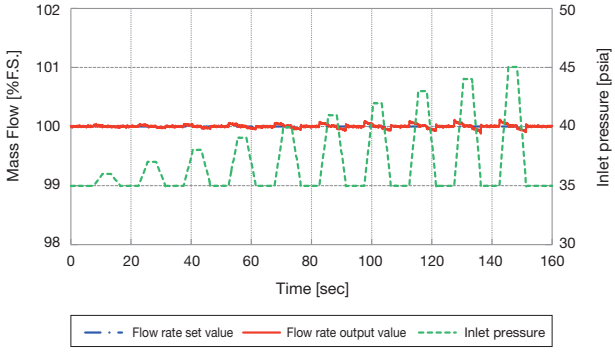

Piping structure

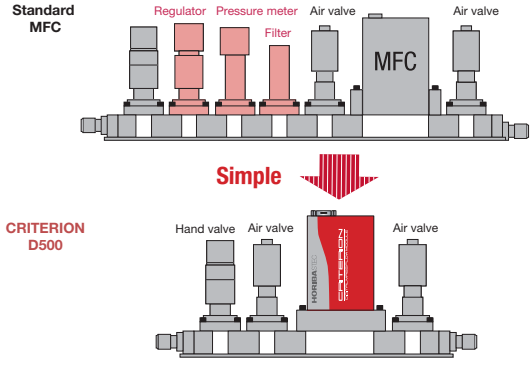

[G-LIFE Self-Diagnosis Function]
(Gas Law check of Integrated Flow restrictor Equation)

Offers more intelligent gas panels

With conventional MFCs, it is difficult to recognize changes in the gas flow rate resulting from the aging of the flow rate sensor. The D500 modules have a self diagnostic function named "G-LIFE" for Gas Law check of the Integrated Flow Equation. G-Life is activated when, at the end of a flow run, the MFC is given a 0% command and the upstream Piezo valve closes. At this time the gas in the volume between the closed valve seat and the flow restrictor bleeds out. The D500 eliminates the necessity for providing an external reference and is able to perform G-LIFE by using in-line falling of the flow rate. Thereby, this device is able to make a diagnosis of change from an initial status, judge validity of process and predict troubles, thus making it possible to reduce loss of wafer and downtime of equipment.

Diagnosis method for G-LIFE

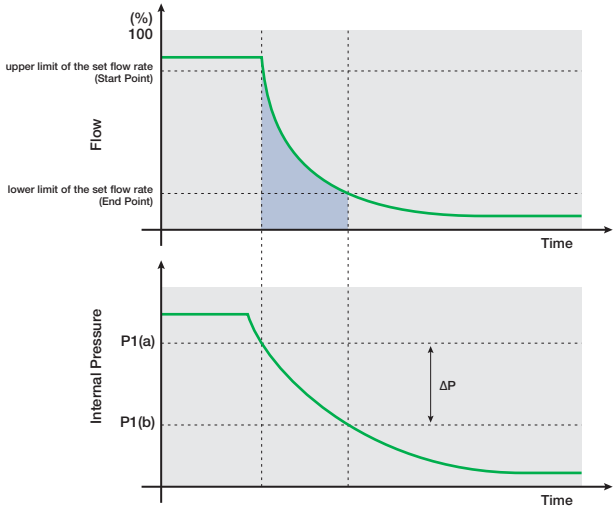

Compare a volume caliculated in the step down response with a default volume and check the flow rate.

[Multi gas, multi range, multi pressure]

Contributions to cost reductions such as reduction in backup supplies

The D500 allows a customer to locally change gas type, full-scale flow rate, and pressure specifications easily by using dedicated software. Therefore, the D500 can be changed in specifications without being removed from a gas panel and piping. It is possible to significantly reduce the number of spare MFCs required to support uptime on an advanced semiconductor process system.

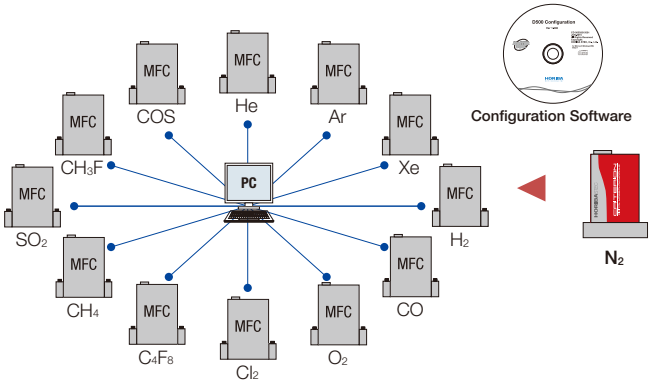

Suitable for multiple types of gas

Freely change types of gas.

Example: D514
Specification H 350～750kPa (A)
MR・MG-03

N_2 300SCCM ▶ C_4F_8 300SCCM

Suitable for multiple ranges

Freely change the full scale.

Example: D514
Specification H 350～750kPa (A)
MR・MG-04

N_2 500SCCM ▶ N_2 700SCCM

Suitable for multiple pressure

Freely change the operating inlet pressure.

Example: D514
Specification H 350～750kPa (A)
MR・MG-05

D514
Specification M 240～450kPa (A)
MR・MG-05

N_2 1000SCCM ▶ N_2 500SCCM

User-friendly software enables easy configuration changes

The D500 offers multi-range, multi-gas, multi-pressure functionality through its Configuration Software. This software makes it possible to select MR/MG numbers simply by entering the type of gas being used and the flow rate range. It also features handy N_2 gas conversion for flow rate measurements using N_2 gas during receipt inspections.

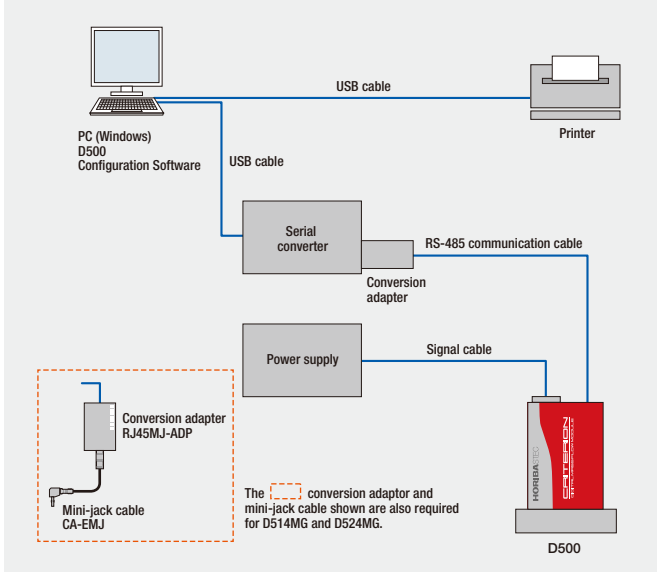

To ensure that the software is used correctly, HORIBA STEC offers software operation training. For information on these training, please contact your HORIBA STEC representative.

Name	Notes
Computer	OS: Japanese or English, Windows® Vista / 7 / 8
Software	Configuration software HORIBA STEC offers seminars detailing the use of the software.
Serial converter	RS-485 ⇔ RS-232C
Conversion adapter	Serial converter ⇔ RJ-45 connecter
USB cable	PC to Serial converter, PC to Printer
RS-485 communication cable	LAN cable for D500 communications
Printer	Please consult your HORIBA STEC representative for further information

The customer can supply all the system components listed above, if desired, except for the software, which must be provided by HORIBA STEC. Please consult your HORIBA STEC representative for more detailed specifications.
*Windows is a registered trademark of Microsoft Corporation.

Changing ranges of the full-scale flow rate

To increase the precision of flow rate calibration, HORIBA STEC offers the following lineup of MR/MG numbers.

List of full-scale flow rates for different gases

MR/MG number \ Gas type	N_2	Ar	O_2	Cl_2	C_4F_8	CHF_3
D51_MG Series						
01	78-157	62-124	68-136	92-184	75-150	86-172
02	137-274	109-218	119-239	161-322	132-263	150-300
03	235-470	187-373	205-409	276-551	226-451	257-515
04	392-784	311-622	341-682	459-919	376-752	429-858
05	627-1254	497-995	546-1092	735-1470	601-1203	686-1373
06	1097-2195	870-1741	955-1911	1234-2469	937-1875	1174-2348
07	1881-3762	1492-2984	1638-3276	2205-4410	1804-3608	2059-4118
08	3135-6270	2487-4974	2730-5459	3675-7349	2886-5773	3432-6863
09	4389-8778	3482-6963	3822-7643	4850-9700	3666-7333	4621-9242
10	5643-11286	4476-8953	4914-9827	5732-11465	4237-8475	5498-10996
D52_MG Series						
11	8025-16049	6549-13098	7145-14290	7314-14628	4980-9959	7031-14063
12	11269-22537	9197-18393	10033-20066	10271-20542	6993-13985	9874-19748
13	15964-31928	13029-26057	14214-28427	13869-27737	9071-18142	13544-27088
14	21595-43190	17769-35538	19545-39090	17003-34005	11008-22016	16749-33498
15	27216-50000	22451-44903	24810-50000	20240-40480	12910-25820	20091-40181

Flow rate may vary depend on spec.

Minimum flow rate — Maximum flow rate Unit : SCCM

Product specifications

Digital/Analog communication model

Model	D512MG					
Specification	H		M		L	
Gas	Configurable					
Full scale	100SCCM - 10SLM		50SCCM - 5SLM		10SCCM - 1SLM	
Operating inlet pressure	350 - 750 kPa(A), Configurable		240 - 450 kPa(A), Configurable		110 - 350 kPa(A), Configurable	
Operating differential pressure	≥ 350 kPa(D)		≥ 240 kPa(D)		≥ 110 kPa(D)	
Operating downstream pressure	≤ 13.3 kPa(A)	≤ 53.3 kPa(A)	≤ 13.3 kPa(A)	≤ 53.3 kPa(A)	≤ 13.3 kPa(A)	≤ 53.3 kPa(A)
Control range	0.2 - 100% F.S. for digital control 2 - 100% F.S. for analog control	0.5 - 100% F.S. for digital control 2 - 100% F.S. for analog control	0.5 - 100% F.S. for digital control 2 - 100% F.S. for analog control	1 - 100% F.S. for digital control 2 - 100% F.S. for analog control	2 - 100% F.S.	5 - 100% F.S.
Flow rate accuracy at 25°C	±1% S.P. (5 - 100% F.S.) ±0.05% F.S. (0.2 - 5% F.S.) + ±0.2%F.S. for analog control	±1% S.P. (10 - 100% F.S.) ±0.1% F.S. (0.5 - 10% F.S.) + ±0.2%F.S. for analog control	±1% S.P. (10 - 100% F.S.) ±0.1% F.S. (0.5 - 10% F.S.) + ±0.2%F.S. for analog control	±1% S.P. (20 - 100% F.S.) ±0.2% F.S. (1 - 20% F.S.) + ±0.2%F.S. for analog control	±1% S.P. (50 - 100% F.S.) ±0.5% F.S. (2 - 50% F.S.) + ±0.2%F.S. for analog control	±1% F.S. (5 - 100% F.S.) + ±0.2%F.S. for analog control
Temperature error from 25°C	±0.05% S.P. / °C (5 - 100% F.S.) ±0.0025% F.S. / °C (0.2 - 5% F.S.) + ±0.01%F.S. / °C for analog control	±0.05% S.P. / °C (10 - 100% F.S.) ±0.005% F.S. / °C (0.5 - 10% F.S.) + ±0.01%F.S. / °C for analog control	±0.05% S.P. / °C (10 - 100% F.S.) ±0.005% F.S. / °C (0.5 - 10% F.S.) + ±0.01%F.S. / °C for analog control	±0.05% S.P. / °C (20 - 100% F.S.) ±0.01% F.S. / °C (1 - 20% F.S.) + ±0.01%F.S. / °C for analog control	±0.05% S.P. / °C (50 - 100% F.S.) ±0.025% F.S. / °C (2 - 50% F.S.) + ±0.01%F.S. / °C for analog control	±0.05% F.S. / °C (5 - 100% F.S.) + ±0.01%F.S. / °C for analog control
Offset / Span stability	±0.5% F.S. / year		±1% F.S. / year		±5% F.S. / year	
Repeatability	±0.3% S.P. (5 - 100% F.S.) ±0.015% F.S. (0.2 - 5% F.S.)	±0.3% S.P. (10 - 100% F.S.) ±0.03% F.S. (0.5 - 10% F.S.)	±0.3% S.P. (10 - 100% F.S.) ±0.03% F.S. (0.5 - 10% F.S.)	±0.3% S.P. (20 - 100% F.S.) ±0.06% F.S. (1 - 20% F.S.)	±0.3% S.P. (50 ~ 100% F.S.) ±0.15% F.S. (2 ~ 50% F.S.)	±0.3% F.S. (5 ~ 100% F.S.)
Valve type	Normally Close / Piezo Actuator					
Settling time for step up *1	≤ 0.8 sec		≤ 0.8 sec		≤ 1 sec	
Valve sheet leak	< 0.2 %F.S.		< 0.5 %F.S.		< 2 %F.S.	
Proof pressure	1000 kPa(A)					
Leak integrity	≤ 5×10^{-12} Pa·m³/s (He)					
Wetted material	SUS-316L, Ni-Alloy					
Standard fitting *2	1/4 inch VCR equivalent, 1.125 inch IGS					
Operating temperature	15 - 45 °C					
Storage temperature	0 - 80 °C					
Installation orientation	Attitude Insensitive					
Inlet pressure accuracy	±10 kPa (0 - 1000 kPa(A)) for digital signal ±17 kPa (0 - 700 kPa(A)) for analog signal					
Temperature accuracy	±1 °C (15 - 45 °C)					
Warming up operation	≥ 30 minutes					
Control interface	Analog:D-Subminiature 9-pin, Digital:RS-485 F-Net Protocol					
Power supply	+15 V ± 5 %, 200 mA as maximum, -15 V ± 5 %, 150 mA as maximum					

*1 This is settling time of flow rate output for calibration gas: N_2. This is in accordance with E17-1011 of the SEMI standards.
*2 IGS: Integrated Gas System

DeviceNet™ communication model ODVA CONFORMANT EtherCAT® communication model EtherCAT

Model	D514MG *3 D517MG *4					
Specification	H		M		L	
Gas	Configurable					
Full Scale	100SCCM - 10SLM		50SCCM - 5SLM		10SCCM - 1SLM	
Operating inlet pressure	350 - 750 kPa(A), Configurable		240 - 450 kPa(A), Configurable		110 ~ 350 kPa(A), Configurable	
Operating differential pressure	≥ 350 kPa(D)		≥ 240 kPa(D)		≥ 110 kPa(D)	
Operating downstream pressure	13.3 ≤ 13.3 kPa(A)	≤ 53.3 kPa(A)	≤ 13.3 kPa(A)	≤ 53.3 kPa(A)	≤ 13.3 kPa(A)	≤ 53.3 kPa(A)
Control range	0.2 - 100% F.S.	0.5 - 100% F.S.	0.5 - 100% F.S.	1 - 100% F.S.	2 - 100% F.S.	5 - 100% F.S.
Flow rate accuracy at 25°C	±1% S.P. (5 - 100% F.S.) ±0.05% F.S. (0.2 - 5% F.S.)	±1% S.P. (10 - 100% F.S.) ±0.1% F.S. (0.5 - 10% F.S.)	±1% S.P. (10 - 100% F.S.) ±0.1% F.S. (0.5 - 10% F.S.)	±1% S.P. (20 - 100% F.S.) ±0.2% F.S. (1 - 20% F.S.)	±1% S.P. (50 - 100% F.S.) ±0.5% F.S. (2 - 50% F.S.)	±1% F.S. (5 - 100% F.S.)
Temperature error from 25°C	±0.05% S.P. / °C (5 - 100% F.S.) ±0.0025% F.S. / °C (0.2 - 5% F.S.)	±0.05% S.P. / °C (10 - 100% F.S.) ±0.005% F.S. / °C (0.5 - 10% F.S.)	±0.05% S.P. / °C (10 - 100% F.S.) ±0.005% F.S. / °C (0.5 - 10% F.S.)	±0.05% S.P. / °C (20 - 100% F.S.) ±0.01% F.S. / °C (1 - 20% F.S.)	±0.05% S.P. / °C (50 - 100% F.S.) ±0.025% F.S. / °C (2 - 50% F.S.)	±0.05% F.S. / °C (5 - 100% F.S.)
Offset / Span stability	±0.5% F.S. / year		±1% F.S. / year		±5% F.S. / year	
Repeatability	±0.3% S.P. (5 - 100% F.S.) ±0.015% F.S. (0.2 - 5% F.S.)	±0.3% S.P. (10 - 100% F.S.) ±0.03% F.S. (0.5 - 10% F.S.)	±0.3% S.P. (10 - 100% F.S.) ±0.03% F.S. (0.5 - 10% F.S.)	±0.3% S.P. (20 - 100% F.S.) ±0.06% F.S. (1 - 20% F.S.)	±0.3% S.P. (50 - 100% F.S.) ±0.15% F.S. (2 - 50% F.S.)	±0.3% F.S. (5 - 100% F.S.)
Valve type	Normally Close / Piezo Actuator					
Settling time for step up *1	≤ 0.8 sec		≤ 0.8 sec		≤ 1 sec	
Valve sheet leak	< 0.2 %F.S.		< 0.5 %F.S.		< 2 %F.S.	
Proof pressure	1000 kPa(A)					
Leak integrity	≤ 5×10^{-12} Pa·m³/s (He)					
Wetted material	SUS-316L, Ni-Alloy					
Standard fitting *2	1/4 inch VCR equivalent, 1.125 inch IGS					
Operating temperature	15 - 45 °C					
Storage temperature	0 - 80 °C					
Installation orientation	Attitude Insensitive					
Inlet pressure accuracy	±10 kPa (0 - 1000 kPa(A))					
Temperature accuracy	±1 °C (15 - 45 °C)					
Warming up operation	≥ 30 minutes					
Control interface	DeviceNet™ Protocol *3 EtherCAT® Protocol *4					
Power supply	DC24V 5.7VA, Applicable for ODVA standard *3 24VDC±4V 6.2VA *4					

*1 This is settling time of flow rate output for calibration gas: N_2. This is in accordance with E17-1011 of the SEMI standards.
*2 IGS: Integrated Gas System *3 DeviceNet™ communication model *4 EtherCAT® communication model

Digital/Analog communication model

D522MG				Model
H	M	L		Specification
Configurable				Gas
10 - 50SLM	5 - 30SLM	1 - 7.5SLM		Full scale
350 - 750 kPa(A), Configurable	240 - 450 kPa(A), Configurable	110 - 350 kPa(A), Configurable		Operating inlet pressure
≥ 350 kPa(D)	≥ 240 kPa(D)	≥ 110 kPa(D)		Operating differential pressure
≤ 53.3 kPa(A)	≤ 53.3 kPa(A)	≤ 13.3 kPa(A)	≤ 53.3 kPa(A)	Operating downstream pressure
0.5 - 100% F.S. for digital control 2 - 100% F.S. for analog control	1 - 100% F.S. for digital control 2 - 100% F.S. for analog control	5 - 100% F.S.		Control range
±1% S.P. (10 - 100% F.S.) ±0.1% F.S. (0.5 - 10% F.S.) + ±0.2%F.S. for analog control	±1% S.P. (20 - 100% F.S.) ±0.2% F.S. (1 - 20% F.S.) + ±0.2%F.S. for analog control	±1% S.P. (50 - 100% F.S.) ±0.5% F.S. (5 - 50% F.S.) + ±0.2%F.S. for analog control	±1% F.S. (5 - 100% F.S.) + ±0.2%F.S. for analog control	Flow rate accuracy at 25°C *1
±0.05% S.P. / °C (10 - 100% F.S.) ±0.005% F.S. / °C (0.5 - 10% F.S.) + ±0.01%F.S. / °C for analog control	±0.05% S.P. / °C (20 - 100% F.S.) ±0.01% F.S. / °C (1 - 20% F.S.) + ±0.01%F.S. / °C for analog control	±0.05% S.P. / °C (50 - 100% F.S.) ±0.025% F.S. / °C (5 - 50% F.S.) + ±0.01%F.S. / °C for analog control	±0.05% F.S. / °C (5 - 100% F.S.) + ±0.01%F.S. / °C for analog control	Temperature error from 25°C
±0.5% F.S. / year	±1% F.S. / year	±5% F.S. / year		Offset / Span stability
±0.3% S.P. (10 - 100% F.S.) ±0.03% F.S. (0.5 - 10% F.S.)	±0.3% S.P. (20 - 100% F.S.) ±0.06% F.S. (1 - 20% F.S.)	±0.3% S.P. (50 - 100% F.S.) ±0.15% F.S. (5 - 50% F.S.)	±0.3% F.S. (5 - 100% F.S.)	Repeatability *1
Normally Close / Piezo Actuator				Valve type
≤ 0.8 sec	≤ 0.8 sec	≤ 1 sec		Settling time for step up *2
< 0.5 %F.S.	< 1 %F.S.	< 5 %F.S.		Valve sheet leak
1000 kPa(A)				Proof pressure
≤ 5×10^{-12} Pa·m^3/s (He)				Leak integrity
SUS-316L, Ni-Alloy				Wetted material
1/4 inch VCR equivalent, 1.125 inch IGS				Standard fitting *3
15 - 45 °C				Operating temperature
0 - 80 °C				Storage temperature
Attitude Insensitive				Installation orientation
±10 kPa (0 - 1000 kPa(A)) for digital signal ±17 kPa (0 - 700 kPa(A)) for analog signal				Inlet pressure accuracy
±1 °C (15 - 45 °C)				Temperature accuracy
≥ 30 minutes				Warming up operation
Analog:D-Subminiature 9-pin, Digital:RS-485 F-Net Protocol				Control interface
+15 V ± 5 %, 200 mA as maximum, -15 V ± 5 %, 150 mA as maximum				Power supply

*1 Flow rate accuracy and repeatability of MR/MG numbers of 14 and 15 guarantee the calibration gas: N_2. *2 This is settling time of flow rate output for calibration gas: N_2. This is in accordance with E17-1011 of the SEMI standards.
*3 IGS: Integrated Gas System

DeviceNet™ communication model ODVA CONFORMANT EtherCAT® communication model EtherCAT®

D524MG *4 D527MG *5				Model
H	M	L		Specification
Configurable				Gas
10 - 50SLM	5 - 30SLM	1 - 7.5SLM		Full scale
350 - 750 kPa(A), Configurable	240 - 450 kPa(A), Configurable	110 - 350 kPa(A), Configurable		Operating inlet pressure
≥ 350 kPa(D)	≥ 240 kPa(D)	≥ 110 kPa(D)		Operating differential pressure
≤ 53.3 kPa(A)	≤ 53.3 kPa(A)	≤ 13.3 kPa(A)	≤ 53.3 kPa(A)	Operating downstream pressure
0.5 - 100% F.S.	1 - 100% F.S.	5 - 100% F.S.		Control range
±1% S.P. (10 - 100% F.S.) ±0.1% F.S. (0.5 - 10% F.S.)	±1% S.P. (20 - 100% F.S.) ±0.2% F.S. (1 - 20% F.S.)	±1% S.P. (50 - 100% F.S.) ±0.5% F.S. (5 - 50% F.S.)	±1% F.S. (5 - 100% F.S.)	Flow rate accuracy at 25°C *1
±0.05% S.P. / °C (10 - 100% F.S.) ±0.005% F.S. / °C (0.5 - 10% F.S.)	±0.05% S.P. / °C (20 - 100% F.S.) ±0.01% F.S. / °C (1 - 20% F.S.)	±0.05% S.P. / °C (50 - 100% F.S.) ±0.025% F.S. / °C (5 - 50% F.S.)	±0.05% F.S. / °C (5 - 100% F.S.)	Temperature error from 25°C
±0.5% F.S. / year	±1% F.S. / year	±5% F.S. / year		Offset / Span stability
±0.3% S.P. (10 - 100% F.S.) ±0.03% F.S. (0.5 - 10% F.S.)	±0.3% S.P. (20 - 100% F.S.) ±0.06% F.S. (1 - 20% F.S.)	±0.3% S.P. (50 - 100% F.S.) ±0.15% F.S. (5 - 50% F.S.)	±0.3% F.S. (5 - 100% F.S.)	Repeatability *1
Normally Close / Piezo Actuator				Valve type
≤ 0.8 sec	≤ 0.8 sec	≤ 1 sec		Settling time for step up *2
< 0.5 %F.S.	< 1 %F.S.	< 5 %F.S.		Valve sheet leak
1000 kPa(A)				Proof pressure
≤ 5×10^{-12} Pa·m^3/s (He)				Leak integrity
SUS-316L, Ni-Alloy				Wetted material
1/4 inch VCR equivalent, 1.125 inch IGS				Standard fitting *3
15 - 45 °C				Operating temperature
0 - 80 °C				Storage temperature
Attitude Insensitive				Installation orientation
±10 kPa (0 - 1000 kPa(A))				Inlet pressure accuracy
±1 °C (15 - 45 °C)				Temperature accuracy
≥ 30 minutes				Warming up operation
DeviceNet™ Protocol *4 EtherCAT® Protocol *5				Control interface
DC24V 5.7VA, Applicable for ODVA standard *4 24VDC±4V 6.2VA *5				Power supply

*1 Flow rate accuracy and repeatability of MR/MG numbers of 14 and 15 guarantee the calibration gas: N_2. *2 This is settling time of flow rate output for calibration gas: N_2. This is in accordance with E17-1011 of the SEMI standards.
*3 IGS: Integrated Gas System *4 DeviceNet™ communication model *5 EtherCAT® communication model

Digital/ Analog communication models

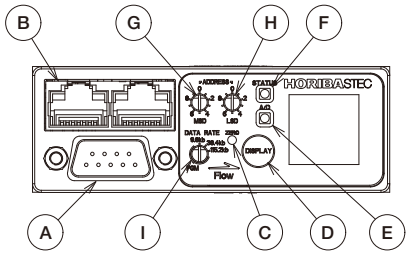

Symbol	Name	Explanation
A	**Analog connector**	Analog communication and power supply
B	**Digital communication Connector**	RS-485 transmission　Daisy chain available
C	**ZERO adjust button**	Button for Zero adjust
D	**Display switching button**	Button for display selecting
E	**LED indicator (Analog/Digital communication)**	Analog transmission：Green light on/Digital transmission：Green light flashing
F	**LED indicator (Status)**	Power voltage error：Red light flashing
G	**MFC communication ID setting switch (MSD)**	Set from 01 to 99 Except 98.
H	**MFC communication ID setting switch (LSD)**	
I	**Baud rate setting switch**	Set baud rate

DIAGNOSTIC PORT is on the side of the D500.

DeviceNet™ communication models

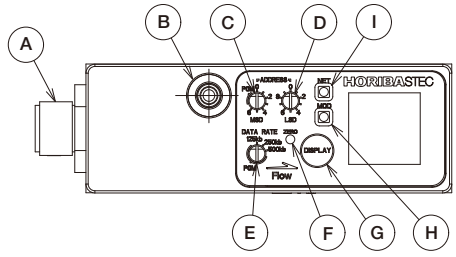

Symbol	Name	Explanation
A	**DeviceNet™ connector**	DeviceNet™ transmission and shield type micro connector
B	**DIAGNOSTIC PORT**	Communication port for services
C	**MFC communication ID setting switch (MSD)**	Set from 00 to 63
D	**MFC communication ID setting switch (LSD)**	
E	**Baud rate setting switch**	Set baud rate
F	**Zero adjust button**	Button for Zero adjust
G	**Display switching button**	Button for display selecting
H	**LED indicator (MOD)**	Status for node
I	**LED indicator (NET)**	Status for network

EtherCAT® communication models

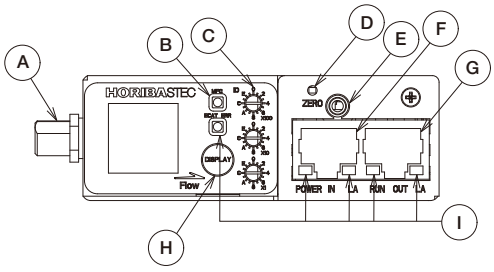

Symbol	Name	Explanation
A	**Power connector**	Drive power supply connector
B	**MFC indicator LED**	Indicates MFC state. Normal: Turns on in green Abnormal: Turns on in red or flashes in red/green depending on abnormal cause
C	**EtherCAT® ID selector**	Settable in a range from 0×0000 to 0×0FFF * If this ID is used for EtherCAT® communication, it is required to perform a predetermined initial setting. If you have any question about how to set up, please contact us.
D	**Zero adjust button**	Button for Zero adjust
E	**DIAGNOSTIC PORT**	Communication port for services
F	**EtherCAT® IN port**	For EtherCAT® communication Connection on IN side
G	**EtherCAT® OUT port**	For EtherCAT® communication Connection on OUT side
H	**Display switching button**	Button for display selecting
I	**EtherCAT® indicator LED**	ECAT ERR: Indicates error state of EtherCAT® communication POWER: Turn on in green when power is supplied LA: Indicates link/active state of each port RUN: Indicates state of EtherCAT® state machine

Multi-display

The D500 is equipped with a multiple display function that enables easy in-situ verification of process conditions and device setup. This onboard display contributes to simplified system maintenance and process tool uptime.

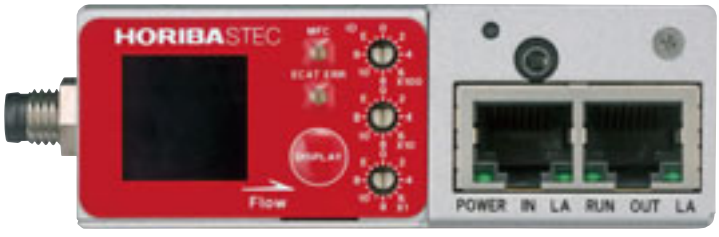

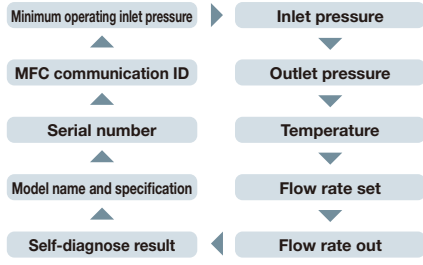

Selecting a model

<Example>	D51	4	MG	–	C	S	,	14C3	,	,	–	M	,	N2	,	100SCCM	–	1	,	1	,	5	,	002	,	007
Step	❶	❷			❸	❹		❺				❻		❼		❽		❾		❿		⓫		⓬		⓭

❶ Model

D51	Specification H: 10SCCM-10SLM
D52	Specification H: 10-50SLM

❷ Protocol

2	Analog/Digital communication
4	DeviceNet™ communication
7	EtherCAT® communication

❸ Valve

C	Normally Closed

❹ Connector position

With Digital analog "T"
With EtherCAT® "S"
With DeviceNet™ only, select "S" or "T"

T	Top Positioned Connector
S	Side Positioned Connector

❺ Fitting

4CRL	1/4 inch VCR equivalent
14C3	1.125 inch C-Seal, i.d. 1/4 inch
14W3	1.125 inch W-Seal, i.d. 1/4 inch

❻ Operating inlet pressure

H	350~750kPa(A)
M	240~450kPa(A)
L	110~350kPa(A)

❼ Gas type

❽ Full scale flow rate

❾ DeviceNet™ MOD LED

Blank	models except for DeviceNet™ model
1	Solid
2	Flash

❿ DeviceNet™ minus flow display

0	OFF
1	ON

⓫ DeviceNet™ counts full scale

1	100%
3	133%
5	133.33%

⓬ DeviceNet™ input assembly

001	001
002	002
003	003
⋮	

⓭ DeviceNet™ output assembly

007	007
008	008
⋮	

External dimensions

1.125 inch IGS

D5□2

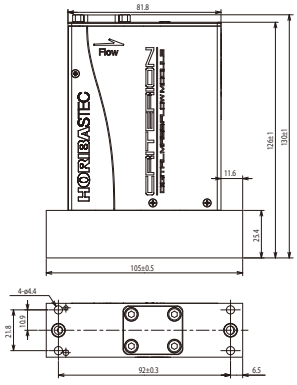

D5□4

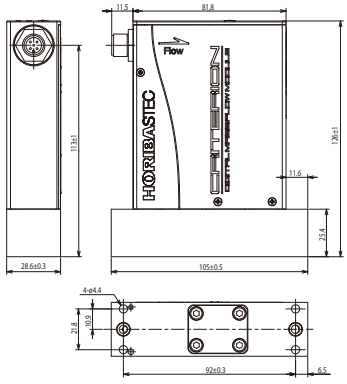

D5□7

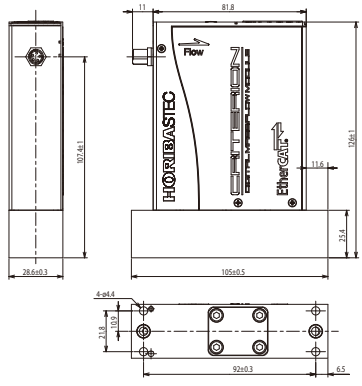

1/4 inch VCR equivalent

D5□2

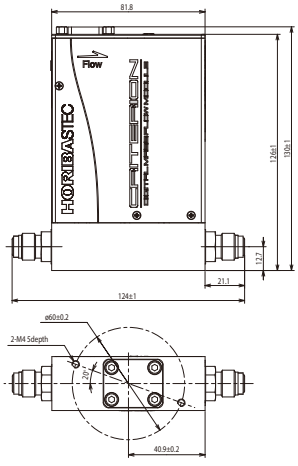

D5□4

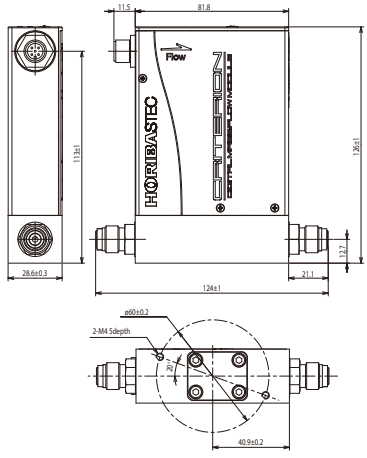

D5□7

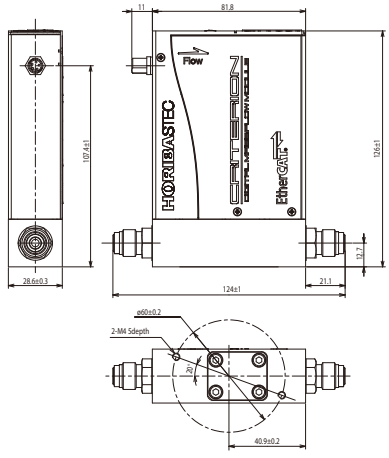

Connection examples

Digital communication

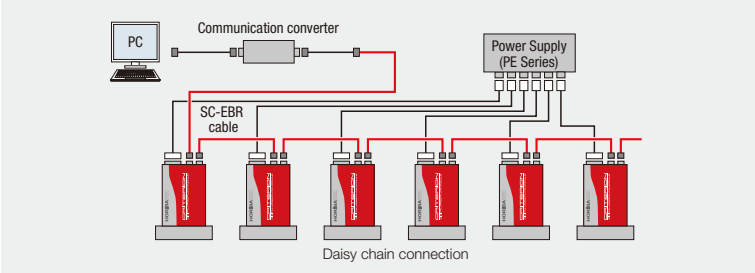

RS485 Digital communication connector

Pin No.	Signal name
1	Signal ground [D. COM]
2	Signal ground [D. COM]
3	N.C.
4	Serial output/input (-)
5	Serial output/input (+)
6	N.C.
7	N.C.
8	N.C.

Connector used: RJ-45

Analog communication

Using an external power source and control signal

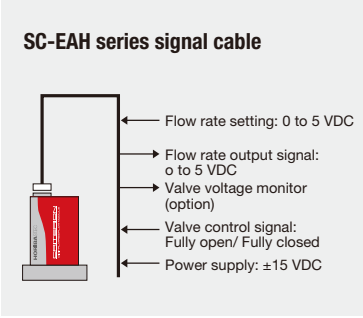

Using PE-S7 control unit

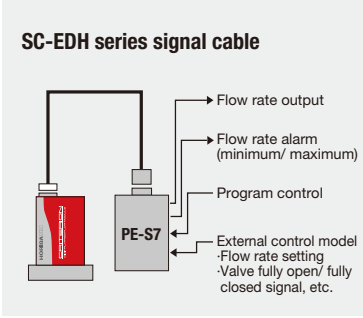

Analog connector

Pin No.	Signal name
1	Valve open/closed input
2	Flow rate output signal: 0 to 5 V DC
3	Power source: +15V DC
4	Power source: Common*1
5	Power source: -15V DC
6	Flow rate setting signal: 0 to 5 V DC
7	Signal: Common*1
8	Signal: Common*1
9	inlet pressure

Connector used: D-subminiature 9-contact-pin connector

*1 The pin No.4 Common power source and pin No.7 signal are not connected within the mass flow controller. The pin No.7 and No.8 Common signals are connected within the mass flow controller.

DeviceNet™ communication

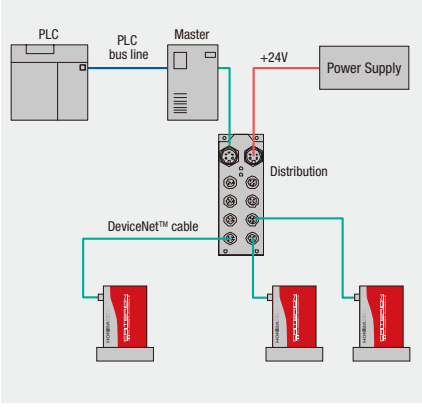

DeviceNet™ communication connectors

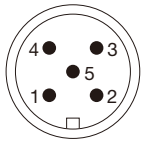

Pin No.	Signal name
1	Drain
2	V+
3	V-
4	CAN_H
5	CAN_L

Advantaged

·Reduces costs, since AD/DA converters and I/O boards are not required.
·The user simply connects the devices through network cables and makes address settings. This reduces both the number of processes required and the time involved.
·No special accessories are necessary for the devices. Users can simply choose DeviceNet™ conforming products, which reduces costs.

DeviceNet™ communication

DeviceNet™ is an open and global field network that was developed by the ODVA (Open DeviceNet™ Vendor Association, Inc.) as a unique means for supporting standardization worldwide. The ODVA offers EDS (Electronic Data Sheet) specifications, which are designed to allow shared operability and programming in a multi-vendor environment. The ODVA also carries out conformance testing. Devices that have passed the ODVA's conformance testing display the logo.

EtherCAT® communication

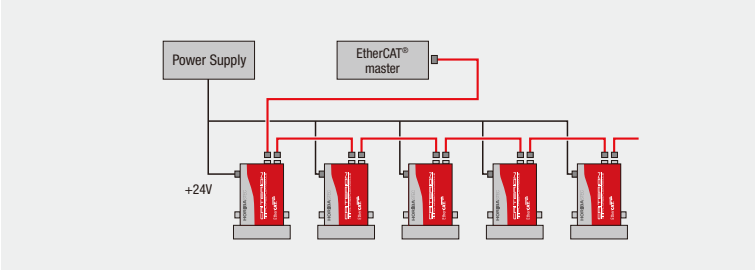

Power connector

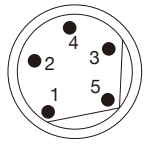

Pin No.	Signal name
1	V+
2	N.C.
3	Power Common
4	N.C.
5	N.C.

Connector used: M8 5pin male connector

* Use connectors that conform to the EtherCAT® Technology Group standard: ETG5003.2020.

What is EtherCAT® communication?

Open field bus system based on Ethernet. ETG (EtherCAT® Technology Group) has been established as an international forum to promote support and diffusion of EtherCAT®, and maintain mutual compatibility. ETG specifies functional requirements, conformance tests and its certification procedure, and permits only devices which satisfy conditions specified by ETG to use the EtherCAT logo.

Features

·High bus efficiency and high-speed data scan is realized by simultaneously communicating with many devices.
·The master can use the standard Ethernet interface when connecting to devices, and does not require expensive dedicated hardware.

Global support

The HORIBA Group's international network ensures complete support for customers.

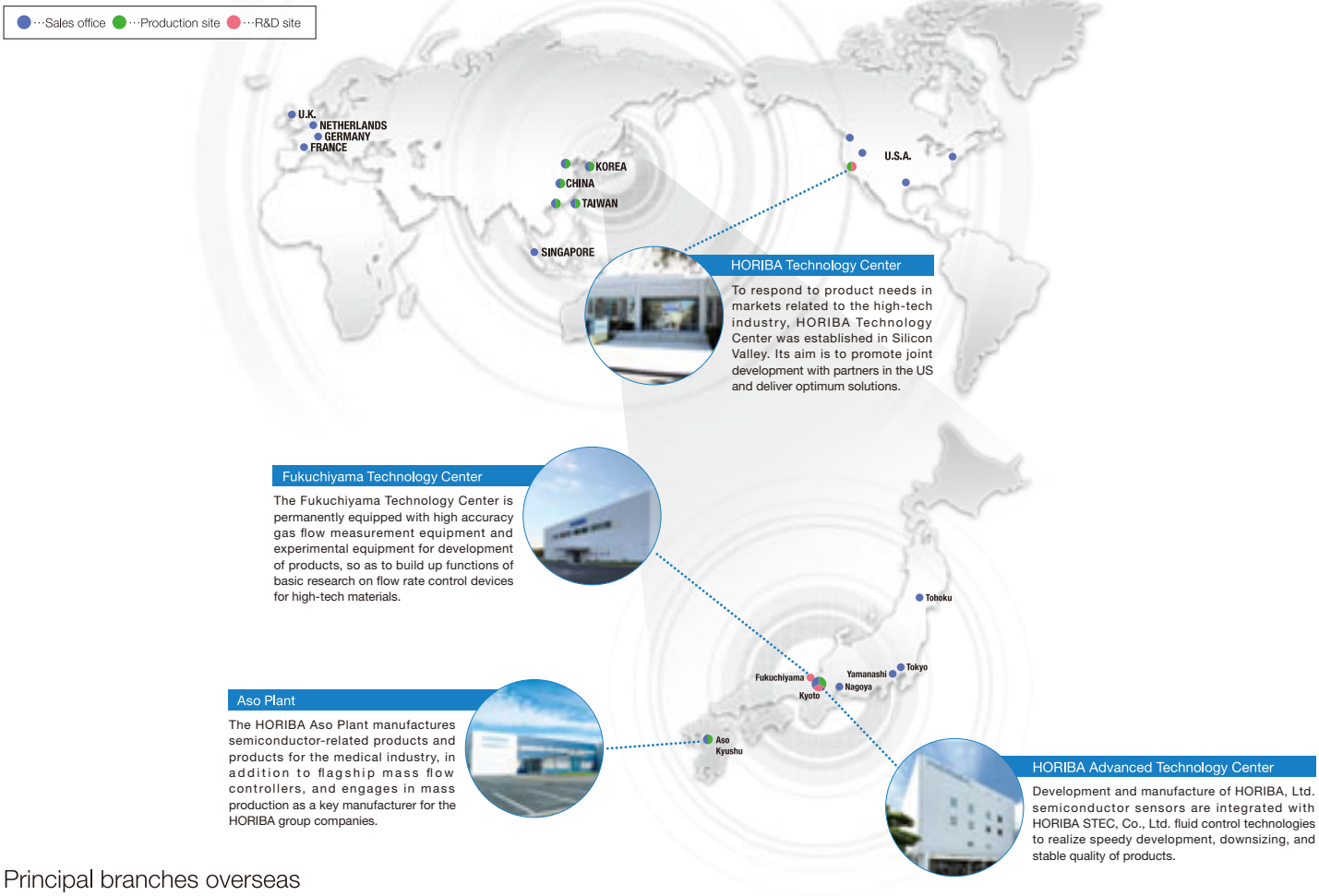

Principal branches overseas

U.S.A

HORIBA Instruments Incorporated

Sunnyvale Head Office (Technology Center)
430 Indio Way, Sunnyvale California 94085
PHONE: (1)408-730-4772 FAX: (1)408-730-8975

Austin Office
9701 Dessau Road, Suite 605 Austin Texas 78754
PHONE: (1)512-836-9560 FAX: (1)512-836-8054

Portland Office
10110 SW. Nimbus Avenue, Suite B11 Portland Oregon 97223
PHONE: (1)503-624-9767 FAX: (1)503-968-3236

Reno Office (R&D Center)
605 Spice Island Drive, #5 Sparks , Nevada 89431
PHONE: (1)775-358-2332 FAX:(1)775-358-0434

Albany Office
Suite104, 58 Clifton Country Rd, Clifton Park New York 12065
PHONE: (1)518-331-1371

SINGAPORE

HORIBA INSTRUMENTS (SINGAPORE) Pte. Ltd.
3 Changi Business Park Vista #01-01 Akzonobel House, 486051 Singapore
PHONE: (65)6-745-8300 FAX: (65)6-745-8155

KOREA

HORIBA STEC Korea, Ltd.
110, Suntechcity, 474, Dunchon-daero
Jungwon-gu, Seongnam-si, Gyeonggi-do,13229, Korea
PHONE: (82)31-777-2277 FAX: (82)31-777-2288

TAIWAN

HORIBA Taiwan, Inc
3F.,No.18,Lane 676, Zhonghua Rd., Zhubei City, Hsinchu Country 302, Taiwan
PHONE: (886)3-656-1160 FAX:(886)3-656-8231

Tainan Office
1F., No.117, Chenggong Rd., Shanhua Dist., Tainan City 741,Taiwan
PHONE: (886)3-583-4592 FAX: (886)6-583-2409

CHINA

HORIBA (China) Trading Co., Ltd.

Beijing office
12F,Metropolis Tower(XinDongFang South Tower), No.2,HaidianDong 3 Street,Haidian District,Beijing,China
PHONE: (86) 10 85679966 FAX: (86) 10 85679066

Shanghai office
Unit D,1F,Building A,Synnex International Park,1069 West Tianshan Road,Shanghai ,China
PHONE: (86) 21 62896060 FAX: (86) 21 62895553

Shanghai service center
Room 303,No.84,Lane887,Zu-chong-zhi Rd.,Zhangjiang, Hi-tech,Shanghai,China
PHONE: (86) 21 51317150 FAX: (86) 21 51317660

Chengdu office
Room C1,17F,No.86,City Center People South Yiduan, Qingyang Section,Chengdu,China
PHONE: (86) 18583234999

Xi'an office
Room 411,Building A, South Fenghui Road,No 36, Xiangshu Street,Xian,China
PHONE: (86) 029 88868480 FAX: (86) 029 88868481

Shenzhen office
Room 3E,Unit3,Building5,Youpinjianzhu Estate, Longhua District,Shenzhen,China
PHONE: (86) 13602530661

UK

HORIBA UK Ltd. Northampton office
Kyoto Close, Moulton Park, Northampton, NN3 6FL, England
PHONE: (44) 1604 542600 FAX: (44) 1604 542696

FRANCE

HORIBA UK Ltd. Grenoble office
2B avenue de vignate 38610 Gieres France
PHONE: (33) 4 76 42 07 58

THE NETHERLANDS

HORIBA UK Ltd. Nijmegen office
PHONE: (31) 24 301 0235

GERMANY

HORIBA Europe GmbH
Hugo-Junckers-Ring 1 01109 Dresden Germany
PHONE: (49) 351/889 68 07

Principal branches in Japan

Head Office
11-5, Hokodate-cho, Kamitoba, Minami-ku, Kyoto-shi, Kyoto,601-8116, Japan
PHONE: (81)75-693-2300 (Representative) FAX: (81)75-693-2350

Aso Factory
Torikokogyodanchi, 358-11, Koumaibata, Toriko, Nishiharamura, Aso-gun, Kumamoto, 861-2401, Japan
PHONE: (81)96-279-2921 FAX: (81)96-279-3364

Touhoku Sales Office
4-21-8, Izumichuo, Izumi-ku, Sendai-shi, Miyagi, 981-3133, Japan
PHONE: (81)22-772-6717 FAX: (81)22-772-6727

Tokyo Sales Office
3F KandaAwaji-cho 2-chome Building, 2-6, KandaAwaji-cho, Chiyoda-ku, Tokyo, 101-0063, Japan
PHONE: (81)3-6206-4731 FAX: (81)3-6206-4740

Yamanashi Sales Office
2-14-13, Marunouchi, Kofu-shi, Yamanashi, 400-0031, Japan
PHONE: (81)55-231-1351 FAX: (81)55-231-1352

Nagoya Sales Office
6F Chikusa 2nd Building, 3-15-31, Aoi, Higashi-ku, Nagoya-shi, Aichi, 461-0004, Japan
PHONE: (81)52-936-9511 FAX: (81)52-936-9512

Kyushu Sales Office
Torikokogyodanchi, 358-11, Koumaibata, Toriko, Nishiharamura, Aso-gun, Kumamoto, 861-2401, Japan
PHONE: (81)96-279-2922 FAX: (81)96-279-3364

Fukuchiyama Technology Center
Miwa, 11-1, Miwamachi, Fukuchiyama-shi, Kyoto, 620-1445, Japan
PHONE: (81)773-59-2070 FAX: (81)773-59-2074

CRITERION

DIGITAL MASS FLOW MODULE

D500

IMS The HORIBA Group adopts IMS (Integrated Management System) which integrates Quality Management System ISO9001, Environmental Management System ISO14001, and Occupational Health and Safety Management System OHSAS18001.
We have now integrated Business Continuity Management System ISO22301 in order to provide our products and services in a stable manner, even in emergencies.

RoHS COMPLIANT

Applying to the EU RoHS Directive : This products is compliant with the restriction of the designated 6 hazardous substances(*).
(*) lead, cadmium, mercury, hexavalent chromium, polybrominated biphenyls (PBB) and polybrominated diphenyl ethers (PBDE)

Using lead-free soldering : Lead-free soldering is used for mounting components of printed circuit boards.
- Many countries consider the reinforcement of regulations concerning the risk caused by lead to human body and the environment

HORIBASTEC

HORIBA STEC, Co., Ltd. http://www.horiba.com/horiba-stec.

Please read the operation manual before using this product to ensure safe and proper handling of the product.

HEAD OFFICE
11-5, Hokodate-cho, Kamitoba, Minami-ku, Kyoto, 601-8116 Japan
PHONE: (81)75-693-2312 FAX: (81)75-693-2331

U.S.A.
HORIBA Instruments Incorporated
Sunnyvale Head Office (Technology Center)
PHONE: (1)408-730-4772 FAX: (1)408-730-8975
Austin Office
PHONE: (1)512-836-9560 FAX: (1)512-836-8054
Portland Office
PHONE: (1)503-624-9767 FAX: (1)503-968-3236
Reno Office (R&D Center)
PHONE: (1)775-358-2332 FAX: (1)775-358-0434
Albany Office
PHONE: (1)518-331-1371

SINGAPORE
HORIBA Instruments (Singapore) Pte Ltd.
PHONE: (65)6-745-8300 FAX: (65)6-745-8155

KOREA
HORIBA STEC KOREA, Ltd.
PHONE: (82)31-777-2277 FAX: (82)31-777-2288

TAIWAN
HORIBA Taiwan, Inc.
PHONE: (886)3-656-1160 FAX: (886)3-656-8231
Tainan Office
PHONE: (886)6-583-4592 FAX: (886)6-583-2409

CHINA
HORIBA (China) Trading Co., Ltd.
Beijing office
PHONE: (86)10 85679966 FAX: (86)10 85679066
Shanghai office
PHONE: (86)21 62896060 FAX: (86)21 62895553
Shanghai service center
PHONE: (86)21 51317150 FAX: (86)21 51317660
Chengdu office
PHONE: (86)18583234999
Xi'an office
PHONE: (86)029 88868480 FAX: (86)029 88868481
Shenzhen office
PHONE: (86) 13602530661

U.K.
HORIBA UK Ltd. Northampton office
PHONE: (44)1604 542600 FAX: (44)1604 542696

FRANCE
HORIBA UK Ltd. Grenoble office
PHONE: (33) 4 76 42 07 58

THE NETHERLANDS
HORIBA UK Ltd. Nijmegen office
PHONE: (31) 24 301 0235

GERMANY
HORIBA Europe GmbH
PHONE: (49) 351/889 68 07

D5-DE

Printed in Japan 1612SK13