HORIBA
Semiconductor

Vapor Concentration Monitor

IR-300 Series

In-line, compact Vapor Concentration Monitor enables MOCVD precursor delivery to be stable, resulting in improved performance and device yield

Metal-Organic Chemical Vapor Deposition (MOCVD) is widely used in the manufacture of LEDs, optical devices and other components. Liquid and solid precursors are delivered to the reaction chamber by controlling the temperature, pressure and the carrier gas flow rate (bubbling method). Process results can be affected by changes especially in temperature and liquid level. The in-line IR-300 Series measures and reports the precursor concentration in real time.

Stable deposition process

■**Benefits of concentration monitoring**

◎Continuous concentration monitoring of precursor
◎Check precursor concentration while adjusting supply conditions
◎Monitor residual quantities of liquid and solid precursors for better utilization

The IR-300 Series: 6 Features for a Stable Precursor Supply

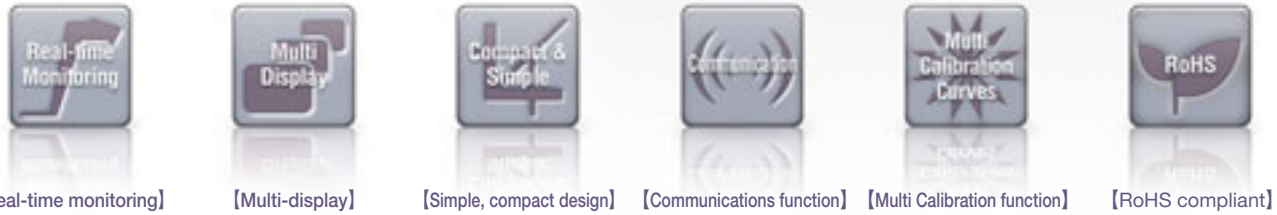

【Real-time monitoring】 【Multi-display】 【Simple, compact design】 【Communications function】 【Multi Calibration function】 【RoHS compliant】

Ideal precursor supply through reliable, high-performance vapor concentration monitoring and fluid control backed by a global service support system.

The analysis technology of global analytical equipment manufacturer HORIBA, Ltd. has been combined with the fluid control technology of HORIBA STEC, Co., Ltd. in the creation of the IR-300 Series Vapor Concentration Monitor. This innovative solution for concentration measurement enables new processes, provides an easy to install, compact solution for our customers, and is supported by HORIBA group's world class global service support network.

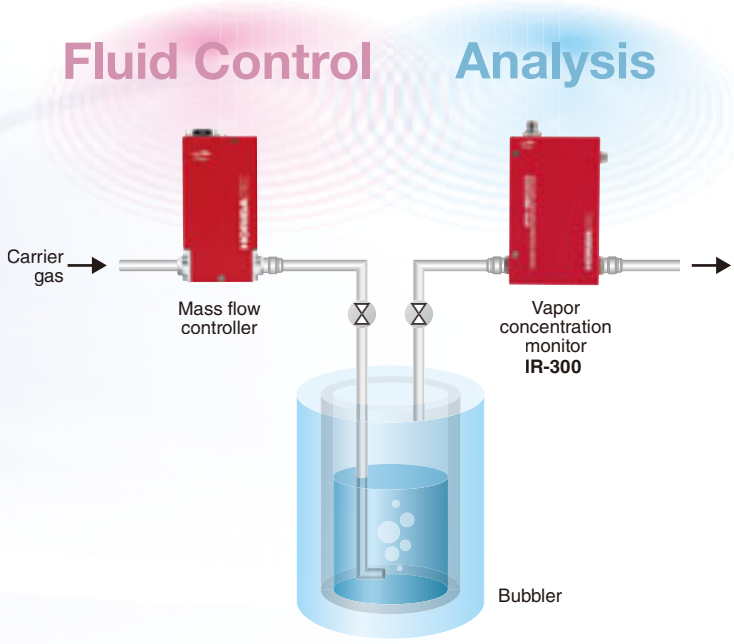

Reliable, High-performance Non-dispersive Infrared Absorptiometry (NDIR)

The infrared absorptiometry method employed by the IR-300 Series uses the principle of the absorption by gas molecules of the infrared light emitted from an infrared light source. A sample output from a sample that has absorbed the gas being measured is compared to a reference output with no absorbance, and the result is converted into a gas concentration. The use of this double beam method enables long-term, stable measurement results to be obtained.

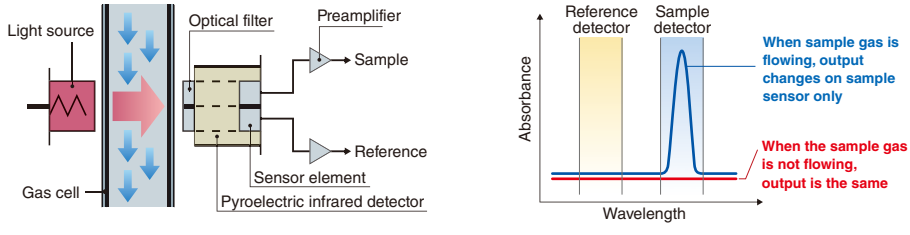

The optical system is made up of a light source, gas cell and double beam detectors. The stability of the double beam detector has been proven over a period of more than 40 years.

Monitoring

Real-time monitoring for a stable vapor concentration supply

IR-300 Series

Real-time Monitoring

Response and repeatability that allow tracking of changes in vapor concentration

A high optical intensity, long-life source combined with a high-speed signal processor enables the IR-300 Series to achieve faster, more repeatable responses to changes in precursor concentration (more than two times better than HORIBA prior-generation technologies), in turn enabling new processes with real-time inline concentration measurement.

*** For stable monitoring, zero calibration prior to measurement (at least once per day) is recommended.**

Measurement Example of MOCVD Precursor

Experiment flow sheet

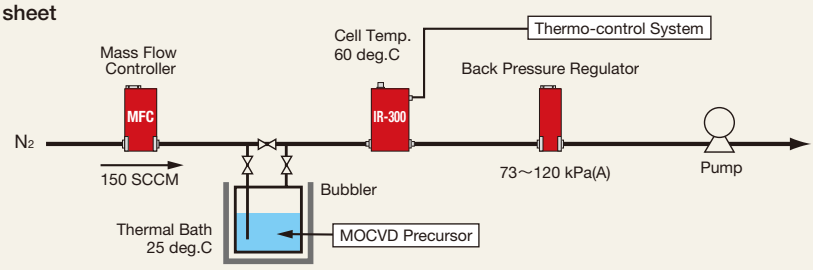

Monitoring of precursor concentration change

Here is an example in which the concentration of the supplied precursor—which changes due to adjustment of the pressure in the bubbler by the back pressure regulator—was monitored in real time.

TEGa

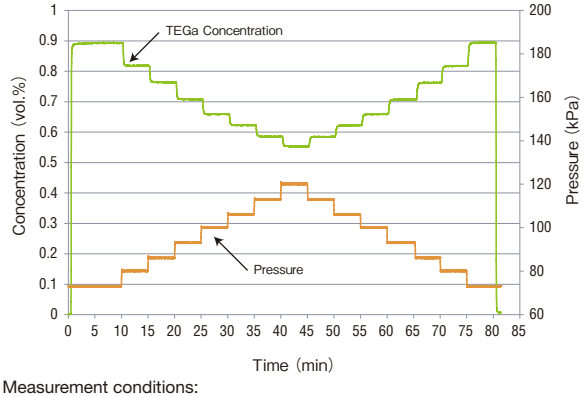

Measurement conditions:
Measurement gas: TEGa, Carrier gas flow rate: 150 SCCM, Bubbler temperature: 25°C

TMAl

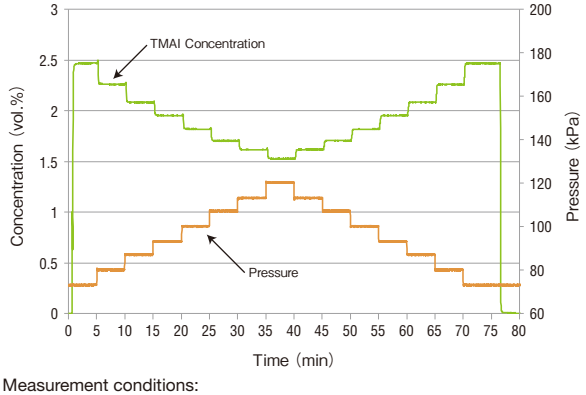

Measurement conditions:
Measurement gas: TMAl, Carrier gas flow rate: 150 SCCM, Bubbler temperature: 25°C

Concentration calculation formula

$$\text{Precursor concentration (vol \%)} = \frac{\text{Partial pressure of precursor}}{\text{Total pressure inside bubbler}} \times 100$$

Multi-calibration Curve Function (Optional)

Allows for the installation of up to 3 discrete chemical/full scale concentration calibration curves.

This option allows the inclusion of 2 additional calibration curves which are customer-enabled using a digital command. This multi-calibration capability reduces Total Cost of Ownership through the reduction of discrete part numbers required and greater flexibility in spares usage, resulting in improved equipment uptime.

Convenient Onsite Checking

Multi-display Function

The multi-display function of the IR-300 Series combines a display and mode LEDs on the top of the unit for onsite checking of concentration monitoring and precursor supply line status.

By switching the mode LEDs, the display on the top of the unit can show the following.

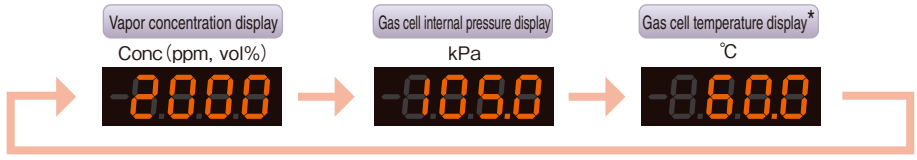

Display current set value or status of adjustable parameters "Calibration curve number", "Moving average number", "Concentration correction gain", and "Analog output gain".

Self-diagnostic Function

The IR-300 Series features a self-diagnostic function that detects maximum and minimum gas cell temperatures, insufficient light intensity and zero calibration errors and alerts the operator with error codes.

* Differs from the measurement location of the sensor connected to the temperature controller for controlling the temperature of gas cells.

Easy to Set Up for Use with Various Kinds of Gas Supply Lines

Communications Function

Line up includes models for DeviceNet™ and digital/analog communications.

The IR-300 Series supports all standard communications protocols for manufacturing devices, such as the open and global field network DeviceNet™, and digital/analog communications. The IR-300 Series is ideal for applications ranging from high performance MOCVD process tools to lab/benchtop experimentation.

● Digital / Analog Communication Model

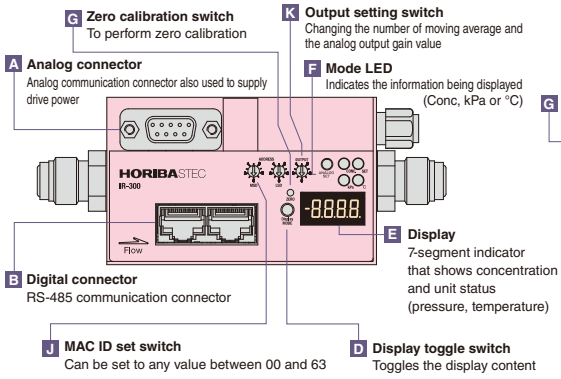

● DeviceNet™ Communication Model

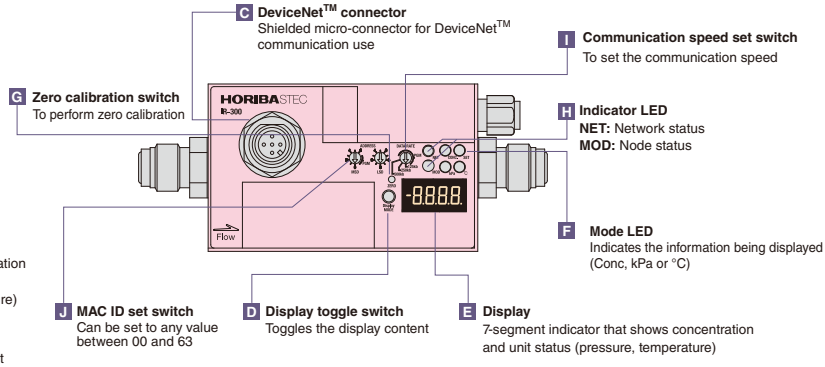

Simple, Compact Design

With a face-to-face size of 124 mm, the unit's compact design allows mounting orientation free.

The built-in display and controller units eliminate the need for external or remote units, enabling more flexible piping configurations and allowing mounting/design on existing as well as new equipment.

● Digital/Analog Communication Model

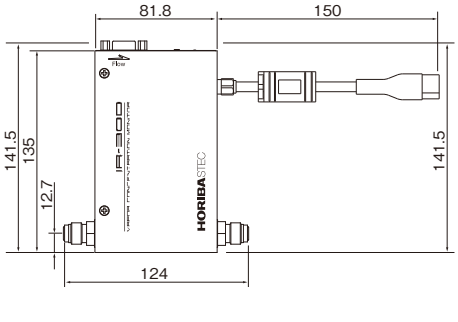

● DeviceNet™ Communication Model

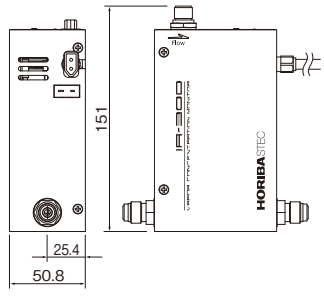

Internal structure

The general structure of the product is as shown in the diagram below. It includes a sensor that measures the pressure in the gas cell, and a heater for cell heating. This allows accurate concentration measurement to be performed through correction of concentration in response to pressure changes, and stabilization of gas cell temperature.

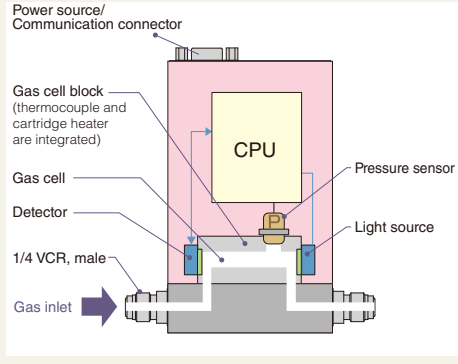

Connector examples

Analog Communication

[Example using an external power source and input & output signals]

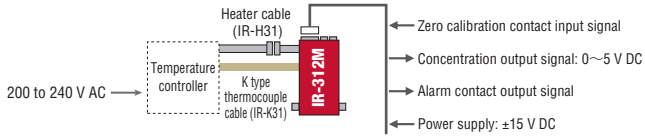

[Example using PE-D10 monitor unit and HC-100AE thermo-control unit]

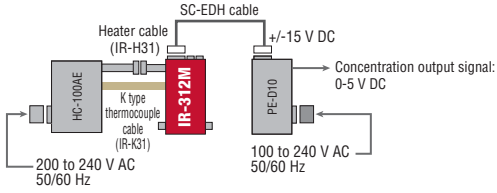

Analog connector (for Concentration Monitor)

Gas concentration monitor side:
D-sub 9 pin female (M3 screw type)

Pin No.	Signal
1	N.C.
2	Concentration output 0V to 5V, Minimum load resistance 2kΩ
3	Power input +15 V ±5% 250 mA
4	Power COM/Contact I/O COM
5	Power input –15 V ±5% 250 mA
6	N.C.
7	Concentration output COM
8	Contact output (alarm output)
9	Contact input (Zero calibration input) Zero calibration is performed on switching OFF to ON (Keep on "ON" status for 6 seconds or more until calibration is finished.)

N.C. means no connection.
Do not connect anything.

Digital Communication

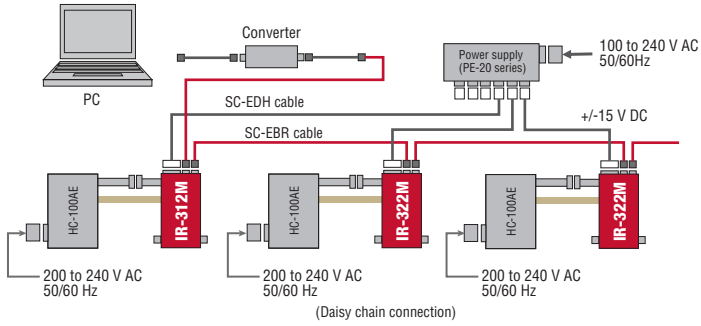

Digital connector

Gas concentration monitor side: RJ45 connector

Pin No.	Signal
1	Digital signal COM
2	Digital signal COM
3	N.C.
4	Serial output(–)
5	Serial output(–)
6	N.C.
7	N.C.
8	N.C.

N.C. means no connection.
Do not connect anything.

* Please refer to the Reference Manual for details of communication protocol and commands.

DeviceNet™ communication

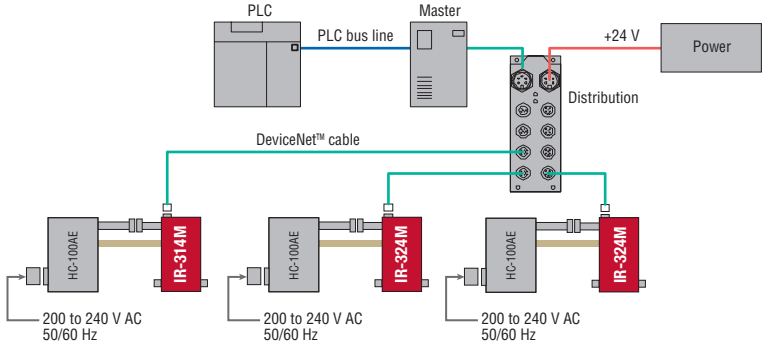

DeviceNet™ communication connector

Connector on gas concentration monitor : Shield type Micro-connector

Pin No.	Signal
1	Drain
2	V+
3	V-
4	CAN_H
5	CAN_L

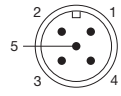

Male(pin)

Supply voltage: 11 V to 25 V DC Use the ODVA compliant power supply and cable.

* Please refer to the Reference Manual for details of communication protocol and commands.

Application Example

Proposal for control of carrier gas flow rate aimed at stable supply of precursor

In order to keep precursor supply rate fixed, a system can be constructed in which changes in concentration C (vol%) are detected, and the carrier gas flow rate controlled at an optimum level.
System construction is implemented through the control units inside the customer's equipment.

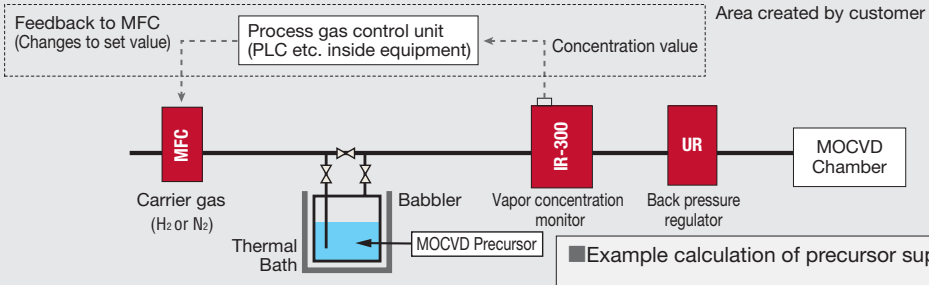

■Example calculation of precursor supply rate

$$\text{Precursor supply rate (g/min)} = \frac{C}{100-C} \times \frac{\text{Molecular mass}}{\text{Molar volume (22.4L)}} \times \text{Carrier gas flow rate (SLM)}$$

Model	IR-312M	IR-314M	IR-322M	IR-324M	IR-322MA	IR-324MA	IR-322MB	IR-324MB
Gas cell optical path length	5mm		50mm		50mm			
Target chemical/ full-scale concentration *1	TMGa / 25 vol% , DEZn / 10 vol% IPA / 5 vol% , IPA / 10 vol%		TMIn / 1 vol% , TMIn / 2.5 vol% , TEGa / 1 vol% , TMGa / 1 vol% TMAl / 2 vol% , DEZn / 2.5 vol% , IPA / 1 vol%		GeH4 1vol%/H2		B2H6 10vol%/H2 or He	
Measurement concentration range	0 to 100% of full scale							
Repeatability *2	≤±0.5% of full scale							
Linearity *2	≤±1.0% of full scale							
Accuracy *3	≤±1.0% of full scale							
Zero drift *2	≤±1.0% of full scale/day							
Response (T90) *4	≤ 4 sec							
Sensor response	≤ 0.4 sec							
Operating pressure range *2*5	30 kPa to 300 kPa (A)				100 kPa to 300 kPa (A)			
Proof Pressure	500 kPa (A)							
Operating flow rate range*2*5	50 to 1000 SCCM							
Operating ambient temperature	15 to 35℃				20 to 35℃			
Setting gas cell temperature	60 ℃ (Need temperature controller prepared by users) *6				Non heating			
Gas cell temperature sensor	Thermocouple K Type (Connector type: OMEGA SMP-K-F)							
Thermal switch	100℃ (self-hold)							
Warming up time	More than 1 hour							
Wetted material	Body: SUS316L, Gas cell optical window: Sapphire, Ag, Cu, Ti, Ni *7				Body : SUS316L、Gas cell optical window : sapphire、Ni 、Al			
Leak integrity	≤ 5×10^{-12} Pa·m³/s (He)							
Fitting	1/4 VCR male or equivalent							
Communication type	Analog/Digital	DeviceNet™	Analog/Digital	DeviceNet™	Analog/ Digital	DeviceNet™	Analog/ Digital	DeviceNet™
Power requirement — Main unit	±15 V DC/3.8 W	24 V DC/12 W	±15 V DC/3.8 W	24 V DC/12 W	±15 VDC / 3.8 W	24 V DC/12 W	±15 VDC / 3.8 W	24 V DC/12 W
Power requirement — Gas cell heater	200 to 240 V AC/Max. 50 VA (Connector type: Molex Standard .093 1545-P1)							
Dimensions	124 x 50.8 x 135 mm exception of projection							
Mounting orientation	Free							
Mass	Approx.1.2 kg		Approx.1.5 kg		Approx.1.2 kg		Approx.1.5 kg	

*1 Please contact HORIBA STEC regarding chemical and/or full-scale concentration other than those shown above.
*2 The specification is guaranteed under the standard conditions of HORIBA STEC. Ambient temperature: 23 ± 2℃ / Gas cell temperature: 60℃ / Measurement flow rate: 1000 SCCM / Calibration gas: C_3H_8 balanced in N_2 at 105 KPa (A).
*3 Accuracy is based on concentration of the calibration gas.
*4 Gas replacement time (Td: time delay) is not included in the response. The typical Td in our inspection equipment is approx. 1.0 second.
※The response without moving average is approx. 1.5 seconds. It is necessary to change # of moving average of firmware settings by digital communication.
*5 This is recommended operating condition.
*6 Required specification of temperature controller
PID operation by auto tuning
Control cycle : 1 second or less
*7 Optional wetted Material : Body ; SUS-316L, Gas cell optical window ; Sapphire, Ni, Al

Type/Specification Selection Chart: Please make selections from specification columns ❷, ❹, ❻, ❼, ❿,and ⓬ below.

IR-3	1	4	M	,	Target chemical 1/ full scale concentration	,	Target chemical 2/ full scale concentration	,	Target chemical 3/ full scale concentration	,	T	1	3	,	200	K	60	,	4CRL	,	A
	❶	❷	❸		❹						❺	❻	❼		❽	❾	❿		⓫		⓬

❶ Gas cell specification

1	5 mm optical path length cell
2	50 mm optical path length cell

❷ Communication type

2	Analog & RS-485/F-net Protocol
4	DeviceNet™

*4 If selecting DeviceNet™, please choose an output scope from ❼.

❸ Model type

M:Standard
MA:GeH4
MB:B2H6

❹ Target chemical/full scale concentration

Please select the desired target chemical and full scale concentration (×1 for standard, ×2 for option). This determines the gas cell specification (IR-31 or IR-32) in ❶.

Target chemical/full scale concentration	❶ Gas cell specification
TMGa / 25 vol% , DEZn / 10 vol% IPA / 5 vol% , IPA / 10 vol%	1
TMIn / 1 vol% , TMIn / 2.5 vol% TEGa / 1 vol% , TMGa / 1 vol% TMAl / 2 vol% , DEZn / 2.5 vol% IPA / 1 vol% , GeH4/H2 1vol% B2H6/H2 10vol% , B2H6/He 10vol%	2

Please contact us regarding target chemicals/full scale concentrations not listed above.

❺ Connector location :

Top-side of the monitor

❻ Calibration curve number:

1	One type
2	Two types (option)
3	Three types (option)

*If selecting MA or MB from ③ please choose "1".

❼ DeviceNet™ output range

Blank	Other than DeviceNet™ model
1	Concentration output full scale "100%F.S."
3	Concentration output full scale "133%F.S." (standard)
5	Concentration output full scale "133.329%F.S."

❽ Heater power requirement : 200-240 V AC

❾ Temperature sensor : K type thermocouple

❿ Heater set temperature : 60℃

60	60℃ (Standard)
AMB	Non-heated (Option)*

*Available for IPA 1 vol% and 5 vol%
Ambient temperature fluctuation must be within ±1℃, otherwise concentration accuracy is out of guarantee.
*If selecting MA or MB from ③ Please choose AMB.

⓫ Fitting : 1/4VCR male or equivalent, Fitting to fitting = 124 mm

⓬ Cell window blazing

Blank	Ag blazing (standard)
A	Kovar with Ni Coating (option)

*If selecting MA or MB from ③ Please choose A (Kovar with Ni coating)
*If selecting TMGa or TEGa from ④ Please choose Blank (Ag blazing)

Global Support

The HORIBA Group's international network ensures complete support for customers.

HORIBA Technology Center

To respond to product needs in markets related to the high-tech industry, HORIBA Technology Center was established in Silicon Valley. Its aim is to promote joint development with partners in the US and deliver optimum solutions.

Fukuchiyama Technology Center

The Fukuchiyama Technology Center is permanently equipped with high accuracy gas flow measurement equipment and experimental equipment for development of products, so as to build up functions of basic research on flow rate control devices for high-tech materials.

Aso Plant

The HORIBA Aso Plant manufactures semiconductor-related products and products for the medical industry, in addition to flagship mass flow controllers, and engages in mass production as a key manufacturer for the HORIBA group companies.

HORIBA Advanced Technology Center

Development and manufacture of HORIBA, Ltd. semiconductor sensors are integrated with HORIBA STEC, Co., Ltd. fluid control technologies to realize speedy development, downsizing, and stable quality of products.

Principal branches overseas

U.S.A

HORIBA Instruments Incorporated

Sunnyvale Head Office (Technology Center)
430 Indio Way, Sunnyvale California 94085
PHONE: (1)408-730-4772 FAX: (1)408-730-8975

Austin Office
9701 Dessau Road, Suite 605 Austin Texas 78754
PHONE: (1)512-836-9560 FAX: (1)512-836-8054

Portland Office
10110 SW. Nimbus Avenue, Suite B11 Portland Oregon 97223
PHONE: (1)503-624-9767 FAX: (1)503-968-3236

Reno Office (R&D Center)
605 Spice Island Drive, #5 Sparks , Nevada 89431
PHONE: (1)775-358-2332 FAX:(1)775-358-0434

Albany Office
Suite104, 58 Clifton Country Rd, Clifton Park New York 12065
PHONE: (1)518-331-1371

SINGAPORE

HORIBA INSTRUMENTS (SINGAPORE) Pte. Ltd.
3 Changi Business Park Vista #01-01 Akzonobel House, 486051 Singapore
PHONE: (65)6-745-8300 FAX: (65)6-745-8155

KOREA

HORIBA STEC KOREA, Ltd.
98, Digital valley-ro Suji-gu, Yongin-si Gyeonggi-do 16878 Korea
PHONE: (82)31-8025-6500 FAX: (82)31-8025-6599

TAIWAN

HORIBA Taiwan, Inc
8F.-8, No.38, Taiyuan St. Zhubei City, Hsinchu County 30265, Taiwan (R.O.C.)
PHONE: (886)3-560-0606 FAX:(886)3-560-0550

Tainan Office
1F., No.117, Chenggong Rd., Shanhua Dist., Tainan City 741,Taiwan
PHONE: (886)6-583-4592 FAX: (886)6-583-2409

CHINA

HORIBA (China) Trading Co., Ltd.

Beijing office
12F,Metropolis Tower(XinDongFang South Tower), No.2,HaidianDong 3 Street,Haidian District,Beijing,China
PHONE: (86) 10 85679966 FAX: (86) 10 85679066

Shanghai office
Unit D,1F,Building A,Synnex International Park,1069 West Tianshan Road,Shanghai ,China
PHONE: (86) 21 62896060 FAX: (86) 21 62895553

Shanghai service center
Room 303,No.84,Lane887,Zu-chong-zhi Rd.,Zhangjiang, Hi-tech,Shanghai,China
PHONE: (86) 21 51317150 FAX: (86) 21 51317660

Chengdu office
Room C1,17F,No.86,City Center People South Yiduan, Qingyang Section,Chengdu,China
PHONE: (86) 18583234999

Xi'an office
Room 411,Building A, South Fenghui Road,No 36, Xiangshu Street,Xian,China
PHONE: (86) 029 88868480 FAX: (86) 029 88868481

Shenzhen office
Room 3E,Unit3,Building5,Youpinjianzhu Estate, Longhua District,Shenzhen,China
PHONE: (86) 13602530661

UK

HORIBA UK Ltd. Northampton office
Kyoto Close, Moulton Park, Northampton, NN3 6FL, England
PHONE: (44) 1604 542600 FAX: (44) 1604 542696

FRANCE

HORIBA UK Ltd. Grenoble office
2B avenue de vignate 38610 Gieres France
PHONE: (33) 4 76 42 07 58

THE NETHERLANDS

HORIBA UK Ltd. Nijmegen office
PHONE: (31) 24 301 0235

GERMANY

HORIBA Europe GmbH
Hugo-Junckers-Ring 1 01109 Dresden Germany
PHONE: (49) 351/889 68 07

IMS

The HORIBA Group adopts IMS (Integrated Management System) which integrates Quality Management System ISO9001, Environmental Management System ISO14001, and Occupational Health and Safety Management System OHSAS18001.
We have now integrated Business Continuity Management System ISO22301 in order to provide our products and services in a stable manner, even in emergencies.

RoHS COMPLIANT

Applying to the EU RoHS Directive : This products is compliant with the restriction of the designated 6 hazardous substances(*).
(*) lead, cadmium, mercury, hexavalent chromium, polybrominated biphenyls (PBB) and polybrominated diphenyl ethers (PBDE)

Using lead-free soldering : Lead-free soldering is used for mounting components of printed circuit boards.
- Many countries consider the reinforcement of regulations concerning the risk caused by lead to human body and the environment

- The contents of this catalog are subject to change without prior notice, and without any subsequent liability to this company.
- It is strictly forbidden to copy the content of this catalog in part or in full.
- All brand names, product names and service names in this catalog are trademarks or registered trademarks of their respective companies.

HORIBASTEC
HORIBA STEC, Co., Ltd. http://www.horiba.com/horiba-stec/

Please read the operation manual before using this product to ensure safe and proper handling of the product.

HEAD OFFICE
11-5, Hokodate-cho, Kamitoba, Minami-ku, Kyoto, 601-8116 Japan
PHONE: (81)75-693-2312 FAX: (81)75-693-2331

IR3-IE

Printed in Japan 1706SK23